AKIRA

makes life better

Air Conditional Service Manual

splitoff.ru

Большая библиотека технической документации

https://splitsystema48.ru/instrukcii-po-ekspluatacii-kondicionerov.html

каталоги, инструкции, сервисные мануалы, схемы.

Model:
AC-S10HKA

Все каталоги и инструкции здесь: https://splitsystema48.ru/instrukcii-po-ekspluatacii-kondicionerov.html

CONTENTS

SPECIFICATIONS 4

FEATURES 6

OPERATING RANGE 8

REMOTE CONTROLLER 10

REFRIGERATION CYCLE 13

OPERATION DETAILS 15

INSTALLATION 25

SERVICE 37

TROUBLE SHOOTING 45

EXPLODED VIEW AND PART LIST 52

WIRING DIAGRAM 56

Все каталоги и инструкции здесь: https://splitsystema48.ru/instrukcii-po-ekspluatacii-kondicionerov.html

SPECIFICATION

Model No.			**AC-S10HKA**
Type			Split type, Cooling and Heating
Cooling Capacity (Btu/h)			9000
Heating Capacity (Btu/h)			9500
Rated Input (w)	Cooling		980
	Heating		980
Moisture Removal (L/H.r)			0.9
Air Circulation (CMH Max)			420
EER for Cooling (Btu/h.w)			9.18(2.69)
COP for Heating (w/w)			2.7
Refrigerant			R22/760g
Power Supply			
Volt/Phase/Hz			220-240V~/1P/50Hz
Rated Current (A)	Cooling		4.2
	Heating		4.2
LRA			22
Noise Level (dB (A))	Indoor Unit	High	35
		Low	30
	Outdoor Unit		50
System			
Compressor Type			Rotary
Compressor Model No.			QK164PDC
Compressor MFG			LG
Expansion Device			Capillary
Evaporator			Copper and Aluminum Fin
Condenser			Copper and Aluminum Fin
Features			
LCD Wireless Remote Controller			Yes
Removable and Washable Panel			Yes
Washable PP Filter			Yes
Active Charcoal Filter			Optional
Electrostatic Filter			Optional
HEPA Filter			Optional
LTC Filter			Optional
24 Hours Timer			Yes

Все каталоги и инструкции здесь: https://splitsystema48.ru/instrukcii-po-ekspluatacii-kondicionerov.html

Model No.		**AC-S10HKA**
3 Speed Control		Yes
Vertical Auto Swing Louver		Yes
Horizontal Auto Swing Louver		No
Sleep Operation		Yes
Smart Function		Yes
Jet Function		Yes
Compressor Indicator		Yes
Auto Restart		Yes
LED temperature display		Yes
Other		
Dimensions WxHxD (mm)	Indoor Unit	770x240x179
	Outdoor Unit	755x530x252
Net Weight (Kg)	Indoor Unit	8
	Outdoor Unit	30
Packing Dimensions WxHxD (mm)	Indoor Unit	830x310x240
	Outdoor Unit	890x580x350
Gross Weight (Kg)	Indoor Unit	10.5
	Outdoor Unit	34.5
Loading Capacity (40’/40’ HC)		245/290
Approvals		CE,

Все каталоги и инструкции здесь: https://splitsystema48.ru/instrukcii-po-ekspluatacii-kondicionerov.html

FEATURES

MODE	DESCRIPTION
COOLING	Cools, dehumidifies and filters the room air. Maintains desired room temperature.
HEATING	Heats and filters the room air. Maintains desired room temperature.
SMART	Operates the appliance at COOLING, HEATING or DRY mode, maintaining desired temperature dependent upon the room temperature.
DRY	Dehumidifies and softly cools the room air. This mode is advisable to be used when the room temperature is rather cool but the humidity is rather high.
FAN ONLY	Re-circulates and filters the room air. Maintains constant air movement in the room.
SLEEP	The SLEEP mode will be canceled after being set for 8 hours. The set temperature will be increased 0.5℃ per hour during the first two hours in COOLING or DRY and decreased 1℃ per hour in the first three hours in HEATING.
AUTO FAN	The appliance automatically selects the indoor fan speed in accordance to the room temperature. At the start, the appliance operates at high fan speed. As the room temperature gets closer to the set temperature, the fan switches to a lower speed for quieter operation.
FAN SPEED HIGH MEDIUM LOW	1. The appliance can set at different indoor fan motor speed by pressing the FAN SPEED button on the remote controller. 2. When this symbol is being displayed on the LCD of the remote controller, the signal is transmitting from the remote controller to the air conditioner.
TEMP. SET UP DOWN	Press DOWN button once, the set temperature is decreased by 1℃. Press UP button once, the set temperature is increased by 1℃.
TIMER	Automatically switches the appliance ON at preset time intervals, ensuring a comfortable environment before you return home, or switches OFF the appliance automatically when you sleep without wasting electricity.

Все каталоги и инструкции здесь: https://splitsystema48.ru/instrukcii-po-ekspluatacii-kondicionerov.html

MODE	DESCRIPTION
Auto -restart	When the power supply restores after its failure, the machine will start to work automatically with the previous setting parameters.
SUPER	Strong cooling when you just come into your room and want to cool the room as soon as possible.

Все каталоги и инструкции здесь: https://splitsystema48.ru/instrukcii-po-ekspluatacii-kondicionerov.html

OPERATING RANGE

1. TEMPERATURE RANGE FOR T1 CLIMATE AIR CONDITIONER

- The preset temperature of the appliance ranges from 18℃ to 32℃.
- The ambient temperature of the cooling only air conditioner ranges from 18℃to 43℃.
- The ambient temperature of the heat pump ranges from –7℃ to 43℃.
- The rated **cooling** operation test condition is as following.

  Indoor DB/WB temperature: 27℃/19℃

  Outdoor DB/WB temperature: 35℃/24℃
- The rated **heating** operation test condition is as following.
- Indoor DB/WB temperature: 20℃/Max.15℃
- Outdoor DB/WB temperature: 7℃/6℃

2. REFRIGERANT PIPING

- The maximum length of the connecting refrigerant piping between indoor unit and outdoor unit is **15m** and the maximum elevation difference between indoor and outdoor units are **5m**.
- If the refrigerant piping is longer than **5m**,additional refrigerant charge **20g/m** for gas pipe is advisable.

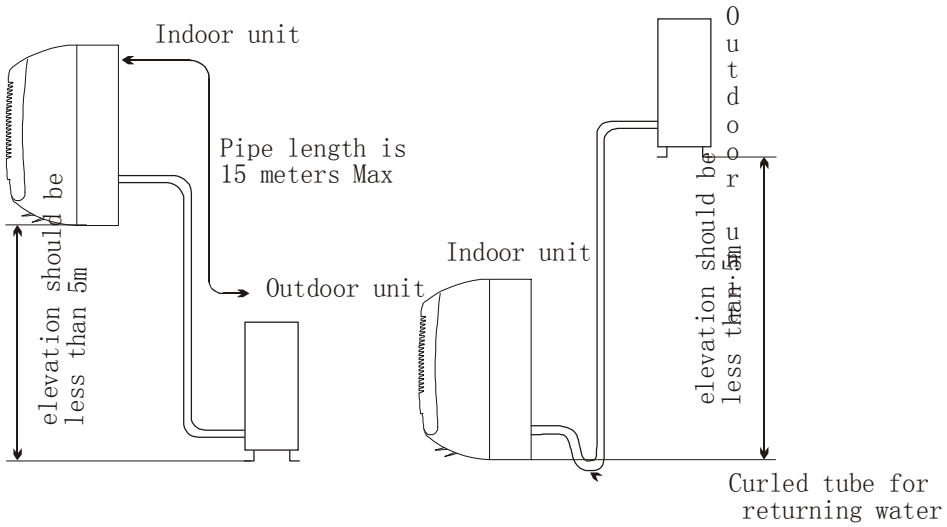

Все каталоги и инструкции здесь: https://splitsystema48.ru/instrukcii-po-ekspluatacii-kondicionerov.html

- Outside diameter of the refrigerant piping is as following.

Models	OD of liquid pipe (Small pipe)	OD of gas pipe (Large pipe)
Cooling only & heat pump	Φ 6mm or ¼ inch	Φ 9.53mm or 3/8 inch

Все каталоги и инструкции здесь: https://splitsystema48.ru/instrukcii-po-ekspluatacii-kondicionerov.html

REMOTE CONTROLLER

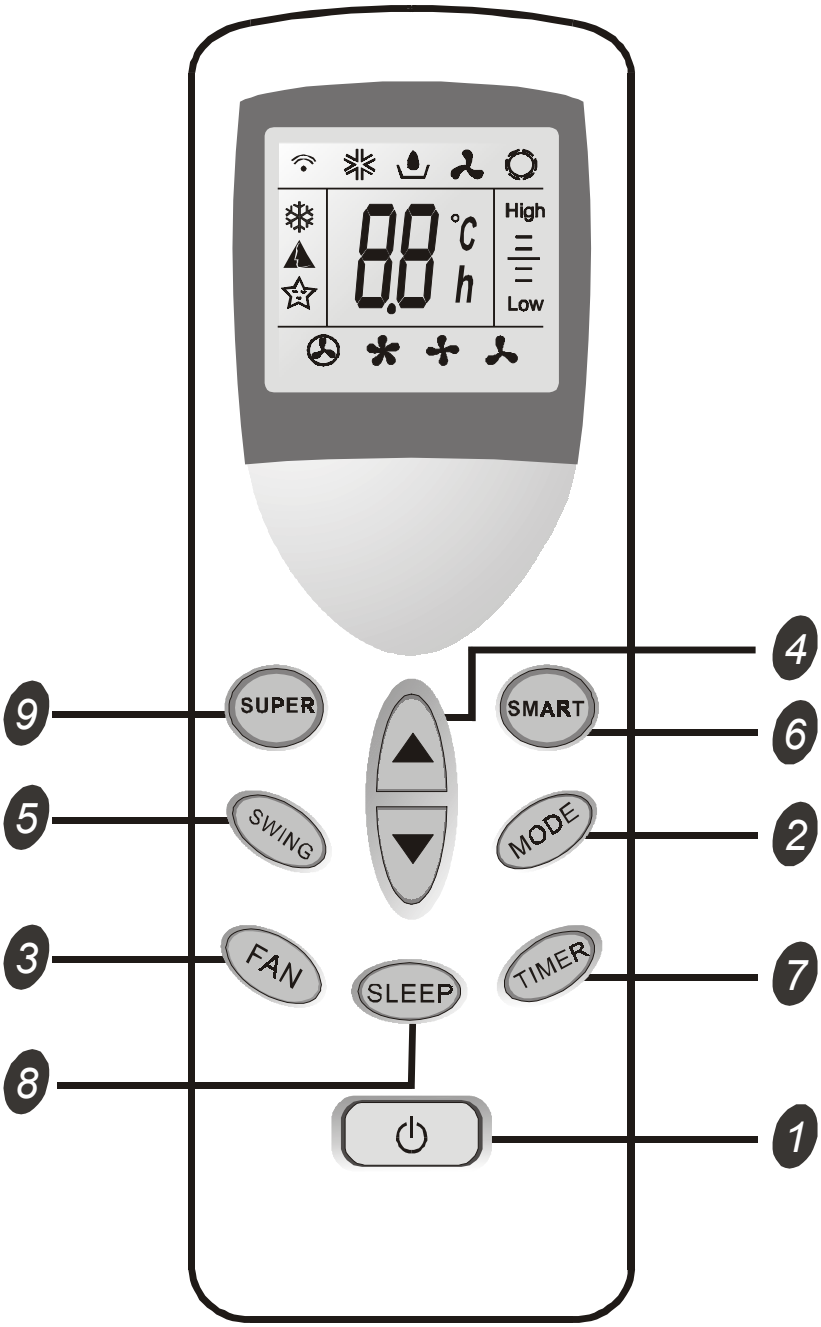

The remote controller transmits signals to the system.

Все каталоги и инструкции здесь: https://splitsystema48.ru/instrukcii-po-ekspluatacii-kondicionerov.html

1. ON/OFF BUTTON

- The appliance will be started when it is energized or will be stopped when it is in operation, if you press this button.

2. MODE BUTTON

- Used to select the type of operation mode.

  COOLING mode

  DRY mode

  FAN ONLY mode

  HEATING mode

3. FAN SPEED BUTTON

- Used to select the indoor fan motor speed.

  Automatic fan speed

  High fan speed

  Medium fan speed

  Low fan speed

4. TEMPERATURE SETTING BUTTON

- Used to adjust the preset room temperature.
- Used to adjust time in TIMER mode.

5. SWING BUTTON

- Press to adjust airflow direction.

6. SMART BUTTON

- Used to enter fuzzy logic operation directly, regardless of the unit is on or off.

Все каталоги и инструкции здесь: https://splitsystema48.ru/instrukcii-po-ekspluatacii-kondicionerov.html

7. TIMER SET/CANCEL BUTTON

- Used to set or cancel the timer operation.

8. SLEEP BUTTON

- Used to set or cancel SLEEP mode operation during COOLING, HEATING, DRY or SMART mode operation.

9. SUPER BUTTON

- Used to start or stop the fast cooling.

  (Fast cooling operates at high fan speed with 18℃ setting temperature automatically)

Indication symbols on LCD:

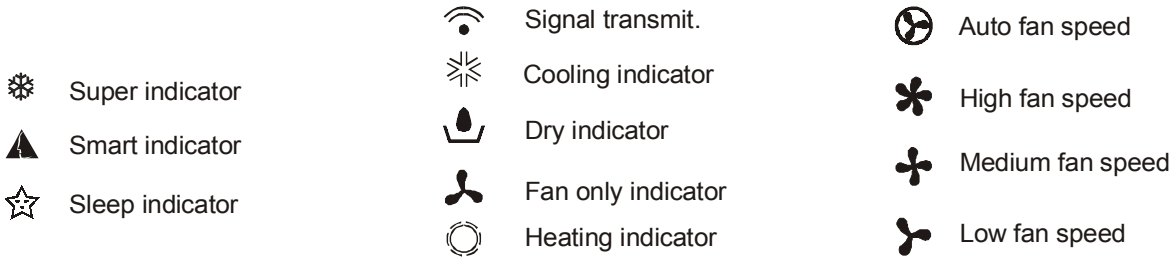

Все каталоги и инструкции здесь: https://splitsystema48.ru/instrukcii-po-ekspluatacii-kondicionerov.html

REFRIGERATION CYCLE

1. Cooling only appliance

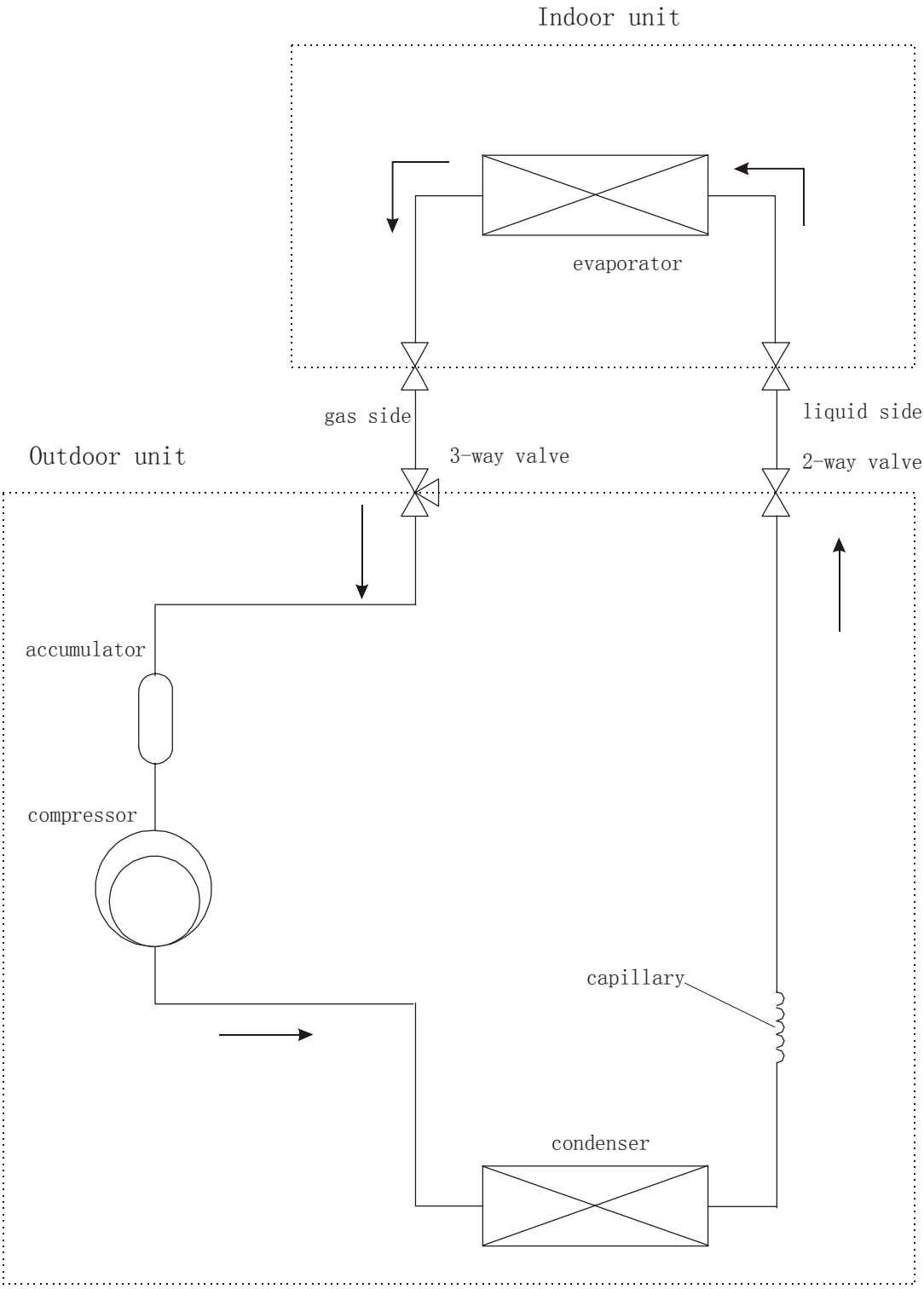

Все каталоги и инструкции здесь: https://splitsystema48.ru/instrukcii-po-ekspluatacii-kondicionerov.html

2. Heat pump

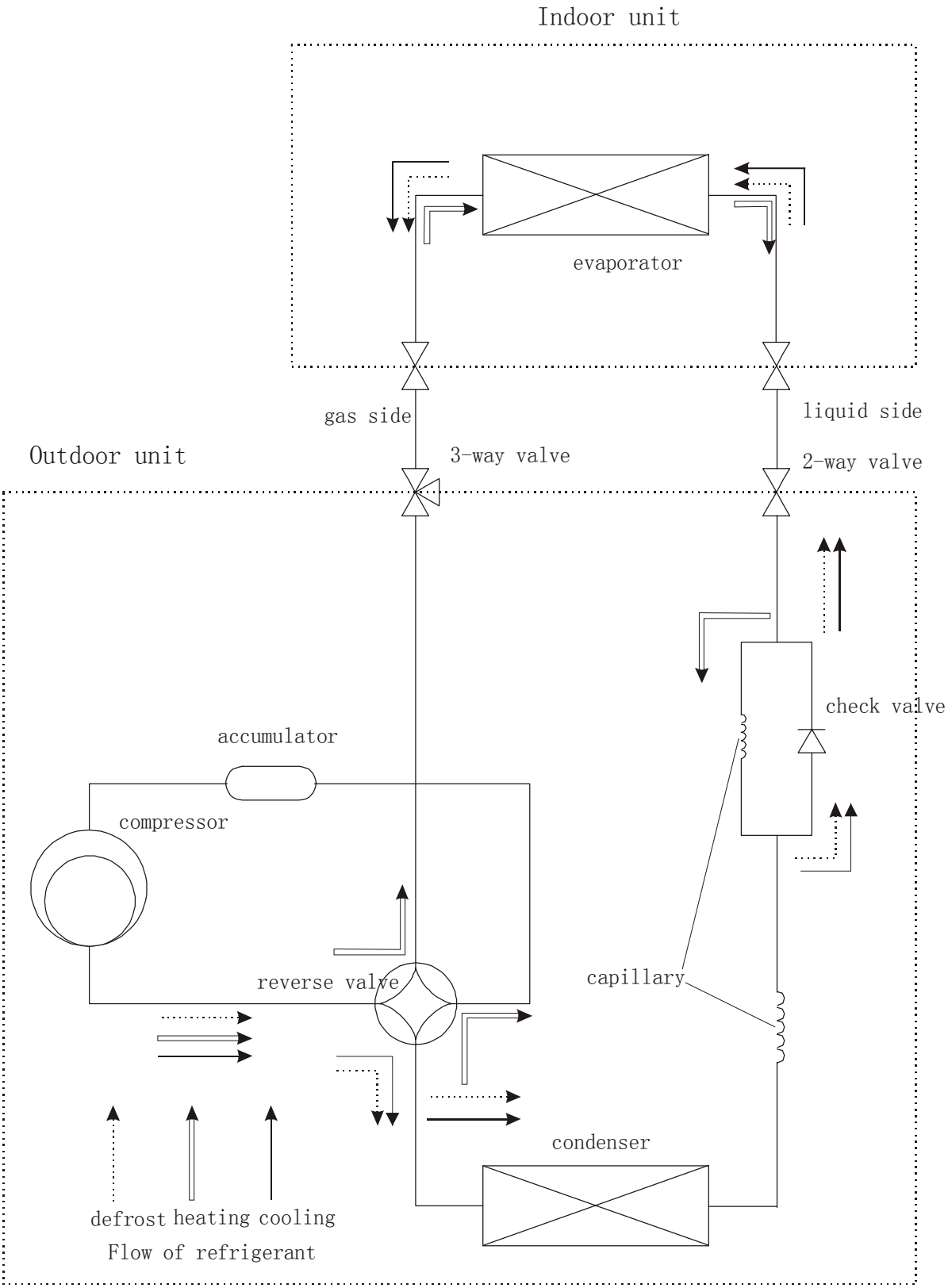

Все каталоги и инструкции здесь: https://splitsystema48.ru/instrukcii-po-ekspluatacii-kondicionerov.html

OPERATION DETAILS

1. SAFETY CONTROL

- **3 minutes delay for compressor**

The compressor is ceased for **3** minutes to balance the pressure in the refrigeration cycle in order to protect the compressor.

- **59 seconds delay for reversing valve**

The 4-way reversing valve delay for **59** seconds to prevent the refrigerant abnormal noise when the HEATING operation is OFF or switched to other operation modes.

- **Over-current control**

The compressor will be switched **OFF** when it is over-current for **5** seconds, and when the current is normal and the compressor has been off for **3** minutes, the compressor will be turned **ON**.

- **Freeze preventive control**

When the indoor pipe temperature falls below **–1**℃ during COOLING or DRY operation for 3 minutes, the compressor and outdoor fan motor turn **OFF** with buzzer 3 beeps . When the indoor pipe temperature recovers to **5**℃and the compressor has been off for **3** minutes, the compressor and outdoor fan motor will be turned **ON**.

- **Overheating protection system**

When overloading occurs during the heating operation, this system controls the outdoor fan motor and compressor according to the indoor pipe temperature to prevent the overloading of the compressor and restrain the rise in high pressure. When the indoor pipe temperature exceeds **53**℃, the outdoor fan motor will be turned **OFF**, and when the indoor pipe temperature falls below **49**℃, the outdoor fan motor recovers to **ON**. When the indoor pipe temperature exceeds **63**℃, the appliance will be turned **OFF** with 4 beeps of buzzer and cannot recover automatically.

Все каталоги и инструкции здесь: https://splitsystema48.ru/instrukcii-po-ekspluatacii-kondicionerov.html

2. AIR FLOW DIRECTION CONTROL

- This function is to swing the louver up and down automatically and to set it at a desired position.
- The procedure is as following.
  - ☞ Press the ON/OFF button to operate the appliance. The louver will swing automatically to the default position.
  - ☞ Press the SWING button to swing the louver up and down automatically.
  - ☞ Repress the SWING button to stop the louver at a desired position.
- The louver is controlled by a step motor. The different default position of different modes is as following:
  - ☞ The louver can swing from 0° to 110°.
  - ☞ The louver closes at 0°.
  - ☞ The louver swings from 25° to 65° with an automatic setting point of 45° during COOLING operation.
  - ☞ The louver swings from 10° to 30° with an automatic setting point of 30° during DRY operation.
  - ☞ The louver swings from 45° to 98° with an automatic setting point of 85° during HEATING operation.
  - ☞ The louver swings from 45° to 98° with an automatic setting point of 85° during FAN only operation.

3. COOLING MODE OPERATION

- When the COOLING mode operation is selected without setting temperature, the appliance will set the preset temperature at 26℃ automatically with the AUTO FAN speed.
- When selecting the COOLING mode operation, the appliance will operate according to the setting by the remote controller and the operation diagram is as following:

Все каталоги и инструкции здесь: https://splitsystema48.ru/instrukcii-po-ekspluatacii-kondicionerov.html

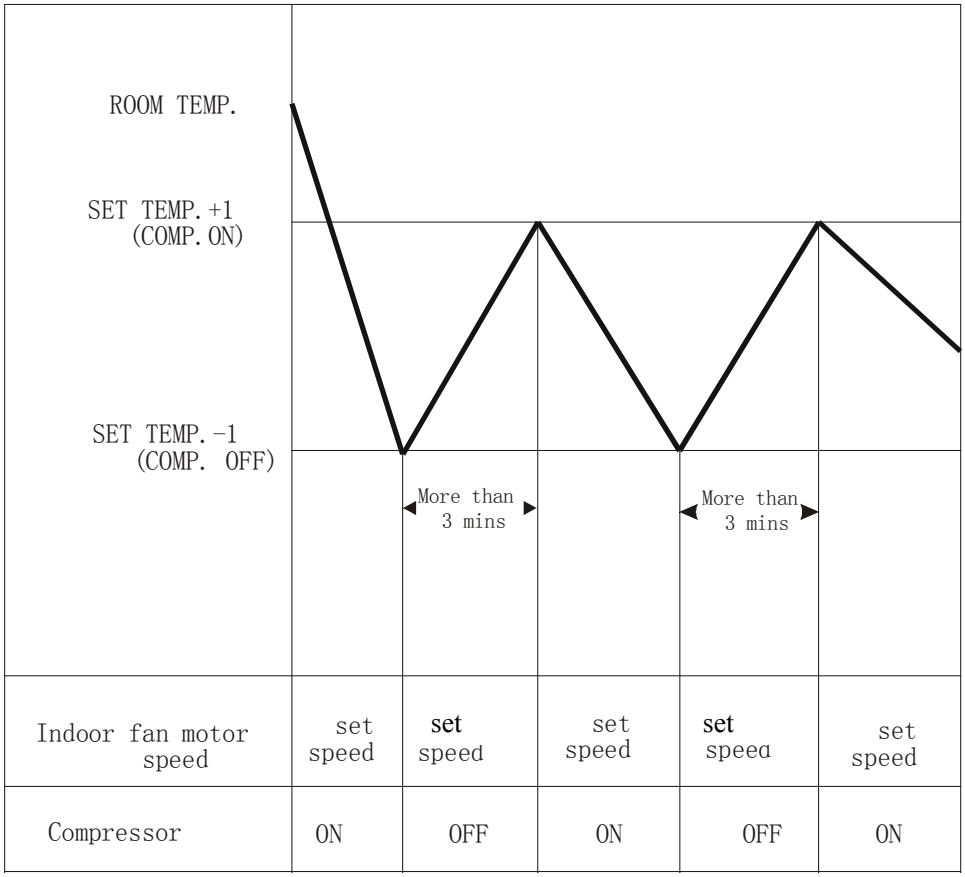

4. DRY MODE OPERATION

- The appliance starts as COOLING operation. If **3** minutes elapses after starting, the appliance will sense the intake air temperature and minus 1.5℃ as the setting temperature.
- During DRY operation, the compressor **ON** when temperature is the setting temperature **plus 1** ℃.The compressor **OFF** when temperature is the setting temperature **minus 1**℃. The setting temperature can only be adjusted by 2℃ up and down.
- When the appliance operates at DRY mode, the indoor motor speed is **LOW.**

Все каталоги и инструкции здесь: https://splitsystema48.ru/instrukcii-po-ekspluatacii-kondicionerov.html

5. HEATING MODE OPERATION (ONLY AVAILABLE FOR HEAT PUMP)

- The appliance will operate at the setting by the remote controller and the operation diagram is shown as following.

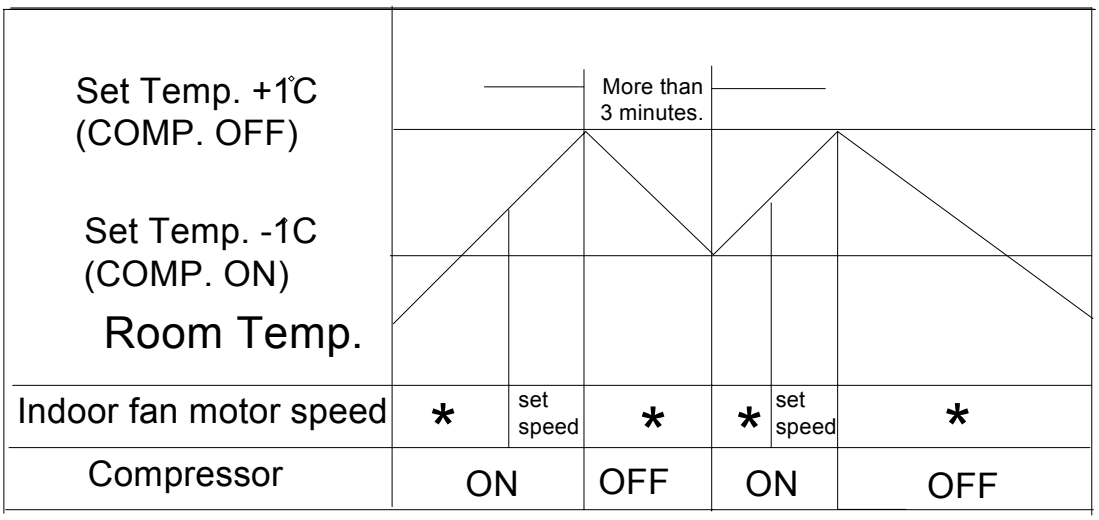

* The indoor fan motor is controlled by Cold Air Preventive System.

6. COLD AIR PREVENTIVE SYSTEM (ONLY AVAILABLE FOR HEAT PUMP)

- This system is intended to prevent cold air from being discharged during HEATING operation.
- The indoor fan motor speed will be controlled as following.

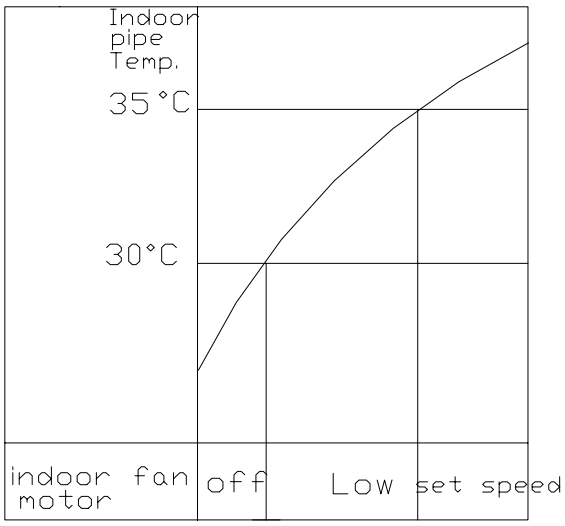

Indoor pipe temp. rises

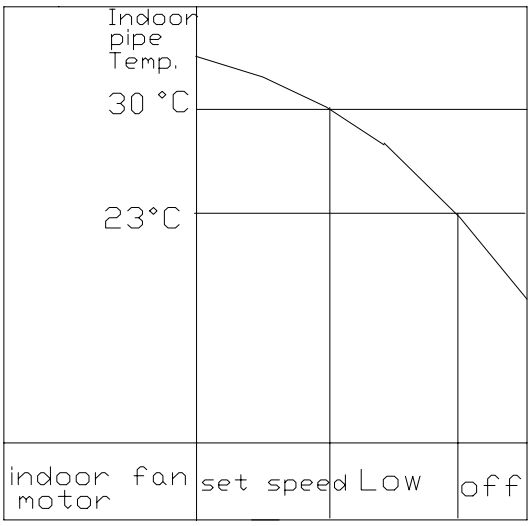

Indoor pipe temp. falls

Все каталоги и инструкции здесь: https://splitsystema48.ru/instrukcii-po-ekspluatacii-kondicionerov.html

7. SMART MODE OPERATION

- When SMART air conditioning is selected, the operation mode and preset temperature are set automatically according to the room temperature at starting operation.
- The operation procedure of **cooling only** is as following.

Intake air temperature at operation start	Over 26℃	Below 26℃
Preset temperature	26℃	Intake air temperature minus 1.5℃
Operation mode	COOLING	DRY

*The initial mode will be continued and independent upon the room temperature changing.

- The operation procedure of **heat pump** is as following.

Intake air temperature at operation start	Over 26℃	21℃ ~ 26℃	Below 21℃
Preset temperature	26℃	Intake air temperature at operation start	22℃
Operation mode	COOLING	DRY	HEATING

The initial mode will be continued and independent upon the room temperature changing.

- If initial mode is selected, that mode is continued, independent upon the temperature changing.
- The indoor fan motor speed is automatically determined by **Auto Fan Speed**. If you are not satisfied with the auto fan speed, you can adjust the fan speed by pressing the FAN BUTTON.

8. AUTO FAN SPEED

- When the Auto Fan Speed is selected in COOLING or HEATING operation, the indoor fan motor speed is automatically controlled by the intake air temperature and the preset temperature.
- The operation procedure of COOLING is as following.

Все каталоги и инструкции здесь: https://splitsystema48.ru/instrukcii-po-ekspluatacii-kondicionerov.html

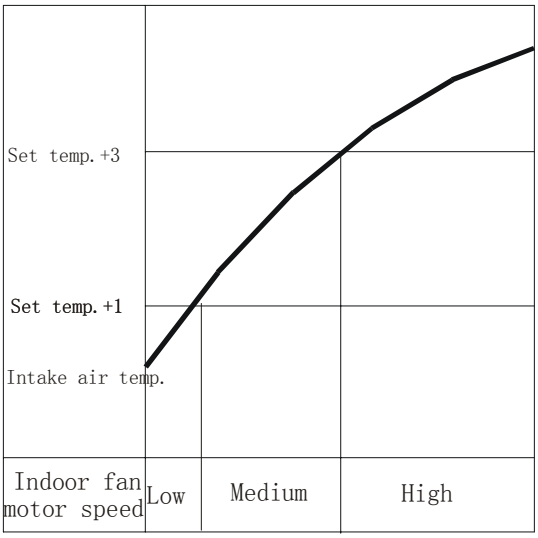

Indoor pipe temperature rises

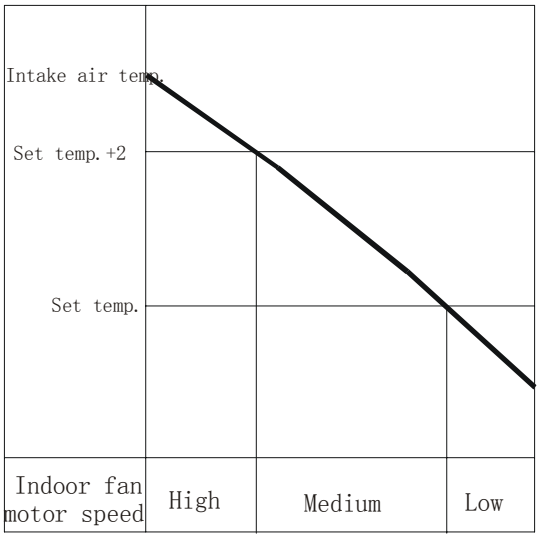

Indoor pipe temperature falls

- The operation procedure of HEATING is as following.

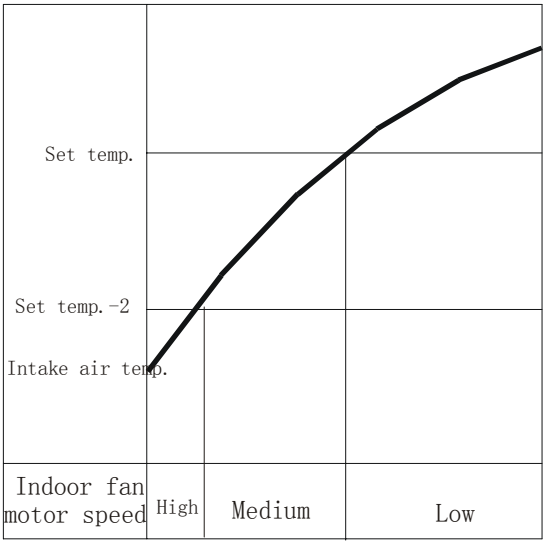

Indoor pipe temperature rises

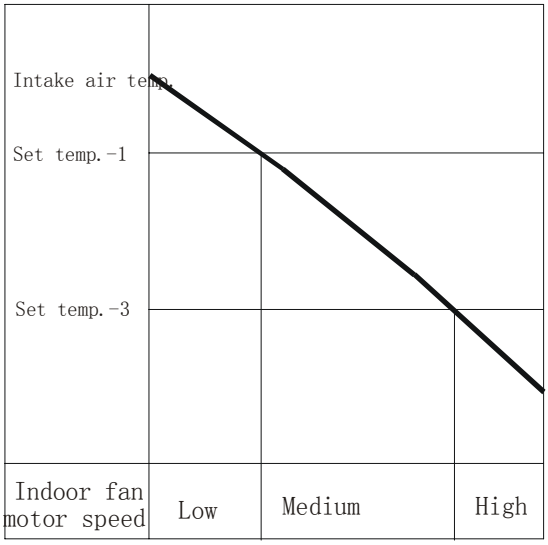

Indoor pipe temperature falls

Все каталоги и инструкции здесь: https://splitsystema48.ru/instrukcii-po-ekspluatacii-kondicionerov.html

9. INDOOR FAN SPEED CONTROL

- Auto Fan Speed control

When set to **Auto Fan Speed**, the indoor fan motor speed is controlled by the difference between the intake air temperature and the preset temperature. The more the difference, the higher the indoor fan motor speed. Auto Fan Speed is only available for COOLING and HEATING modes.

- Manual fan speed control

Basic fan motor speed adjustment (3 setting, LOW, MEDIUM and HIGH) can be conducted by using the **Fan Speed Selection** button on the remote controller.

- The indoor fan speed in different modes is shown as following.

Fan Speed		High(H)	Medium(M)	Low(L)	Stop
COOLING	Manual	OK	OK	OK	N/A
	Automatic	OK	OK	OK	N/A
HEATING	Manual	OK	OK	OK	N/A
	Automatic	OK	OK	OK	N/A
	Cold Air Preventive	OK	OK	OK	OK
DRY		N/A	N/A	OK	N/A
FAN ONLY		OK	OK	OK	N/A

10. EMERGENT START

- If you lose the remote controller or the remote controller defected, you can also operate the appliance by pressing the EMERGENT BUTTON on the indoor unit for an emergent start.
- The operation mode is **SMART** if an emergent start is presented when the appliance is connected to the power at first time. If the appliance is in stand by, the operation mode will restore the last time setting when you press the EMERGENT BUTTON.

11. AUTORESTART FUNCTION

When the unit is connected to power, pressing the EMERGENT BOTTON for over 5 seconds; if the unit without auto restart function, it will be of the function of auto restart after the buzzer 2 beeps; if the unit with auto restart function, it will discharge the auto restart function after the buzzer 3 beeps.

Все каталоги и инструкции здесь: https://splitsystema48.ru/instrukcii-po-ekspluatacii-kondicionerov.html

12. DEFROST

- The defrost timer (integrating the operation time of compressor) counts time by microprocessor during HEATING operation.
- When the unit has run in heating mode for **50** minutes and when the outdoor pipe temperature falls to **–8**℃, the defrosting is started. When the outdoor pipe temperature exceeds **8**℃ or the defrosting time reaches **10** minutes, the defrosting is ended.
- During the defrosting operation, the red LED indicator on the indoor unit of the appliance flickers.
- In the defrost operation, firstly the compressor and the outdoor fan motor are turned **OFF**. **59 seconds** later the reversing valve is turned **OFF**. **60 seconds** later the compressor is turned **ON**.
- The maximum defrost time is 10 minutes.
- In the end of defrosting, the compressor is turned **OFF**, **59 seconds** later the reversing valve is turned **ON**. **60 seconds** later the compressor and outdoor fan motor are turned **ON** and starting HEATING operation.
- During the defrost operation, the indoor fan motor is controlled by **Cold Air Preventive System.**
- The HEATING and defrosting operation is alternated as following.

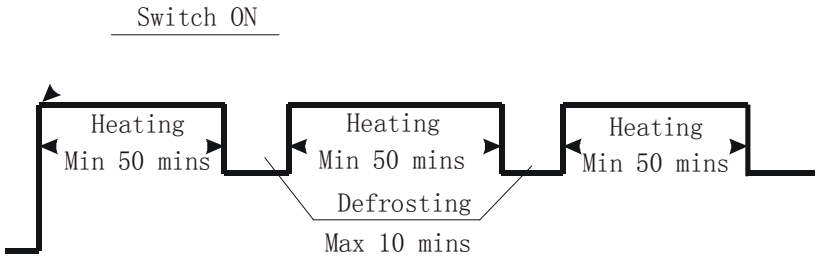

Все каталоги и инструкции здесь: https://splitsystema48.ru/instrukcii-po-ekspluatacii-kondicionerov.html

- The defrosting procedure is shown as following.

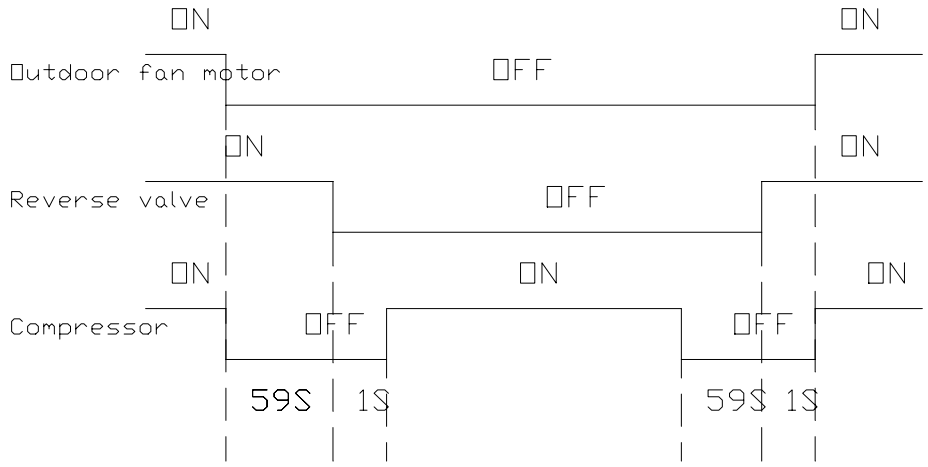

13. TIMER MODE OPERATION

- The setting time ranges from 0.5 hour to 24 hours.
- **OFF-TIMER** can be set when the appliance is **in operation**, and it will be switched **OFF** when the preset time is achieved.
- **ON-TIMER** can be set when the appliance is **in STANDBY**, and it will be switched **ON** when the preset time is achieved.
- Pressing TIMER button once, the last setting time display on the LCD of remote controller. You can adjust the setting time by pressing the TEMPERATURE SETTING BUTTON. Pressing the TIMER button again, the timer mode is selected and the yellow LED indicator on the indoor unit lights up.
- The TIMER mode can be cancelled by pressing the TIMER button again on the remote controller.

Все каталоги и инструкции здесь: https://splitsystema48.ru/instrukcii-po-ekspluatacii-kondicionerov.html

14. SLEEP MODE OPERATION

- The SLEEP mode can only be set during COOLING, DRY, SMART or HEATING operation.
- An energy conservation operation will be achieved if selecting SLEEP mode combined with OFF-TIMER. The operation will be turned OFF after the preset time. The maximum preset time of SLEEP mode is 8 hours (default time).
- When selecting the COOLING or DRY operation with SLEEP mode, the operation diagram is as following. The setting temperature will be raised by **0.5**℃ **per hour in the first two hours** after the starting. The operation will stop after **8** hours.

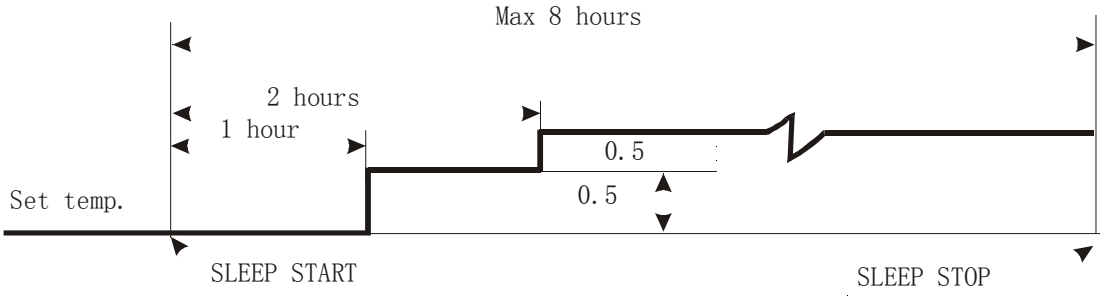

- When selecting HEATING operation with SLEEP mode, the setting temperature will be decreased by **3**℃**during successive 3 hours later**. The operation will stop in 8 hours. The operation diagram is as following.

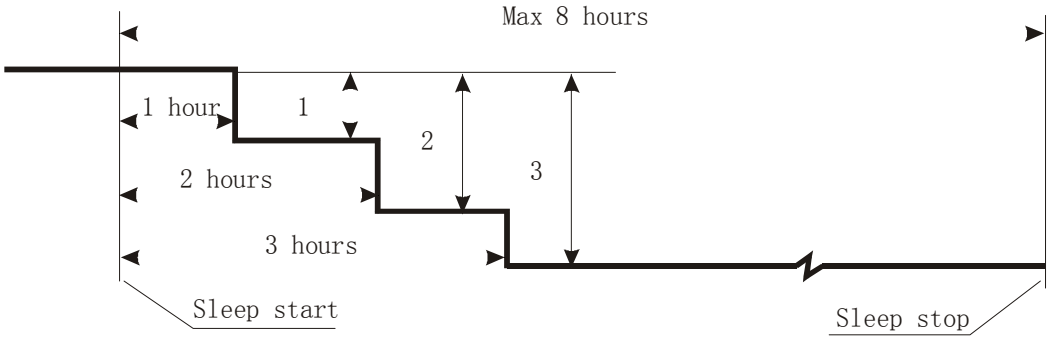

Все каталоги и инструкции здесь: https://splitsystema48.ru/instrukcii-po-ekspluatacii-kondicionerov.html

INSTALLATION

Notice: There is detailed information about installation in the OPERATING AND INSTALLATION INSTRUCTIONS MANUAL. The same information is not repeated in this TECHNICIAN SERVICE MANUAL.

1. SELECT THE BEST LOCATION

- Indoor unit
  - ☞ There should not be any heat source or steam near the unit.
  - ☞ There should not be any obstacles to prevent the air circulation.
  - ☞ A place where air circulated in the room will be good.
  - ☞ A place being drained can be easily obtained.
  - ☞ A place where noise prevention is taken into consideration.
  - ☞ Do not install the unit near the door way.
  - ☞ Ensure the spaces from the wall, ceiling, fence or other obstacles.
- Outdoor unit
  - ☞ If an awning is built over the unit to prevent direct sunlight or rain exposure, be careful that heat radiation from the condenser is not restricted.
  - ☞ There should not be any animals or plants which could be affected by air discharged.
  - ☞ Ensure the spaces from the wall, ceiling, fence or other obstacles.
  - ☞ A place where noise does not annoy your neighbors.

2. DRILL THE PIPING HOLE WITH 70mm DIAMETER HOLE-CORE DRILL

- Line according to the arrows marked on the lower left and right side of the installation plate.
- The meeting point of the extended line is the center of the hole.
- Drill the piping hole at either the right or the left and the hole should be slightly slant to the outdoor side.

Все каталоги и инструкции здесь: https://splitsystema48.ru/instrukcii-po-ekspluatacii-kondicionerov.html

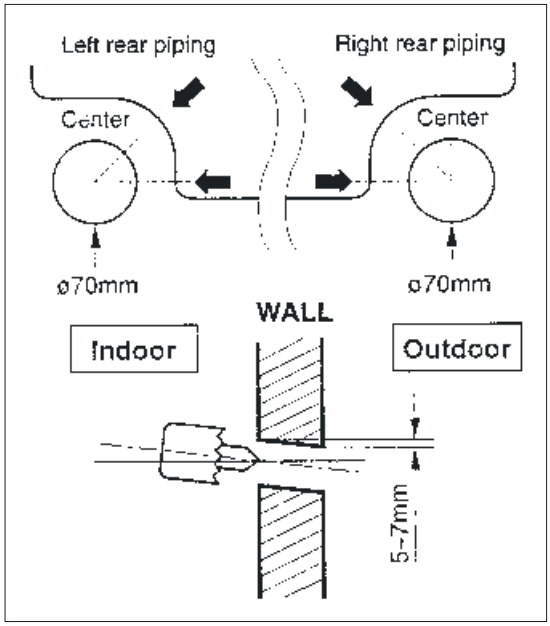

3. PIPING AND DRAINAGE OF INDOOR UNIT

- Preparation of piping

1) Cut the pipes and the cable

☞ Use the accessory piping kit or the pipes purchased locally.

☞ Measure the distance between the indoor and the outdoor units.

☞ Cut the pipes a little longer than measured distance.

☞ Cut the cable a 1.5m longer than the pipe length.

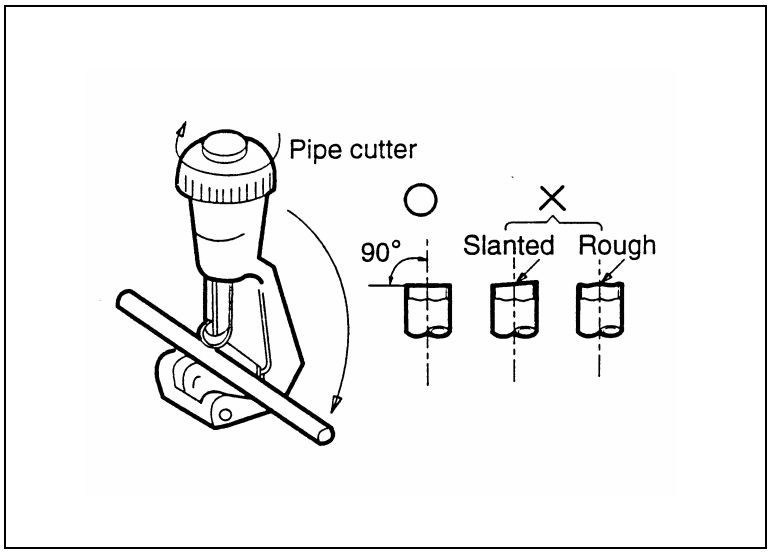

Все каталоги и инструкции здесь: https://splitsystema48.ru/instrukcii-po-ekspluatacii-kondicionerov.html

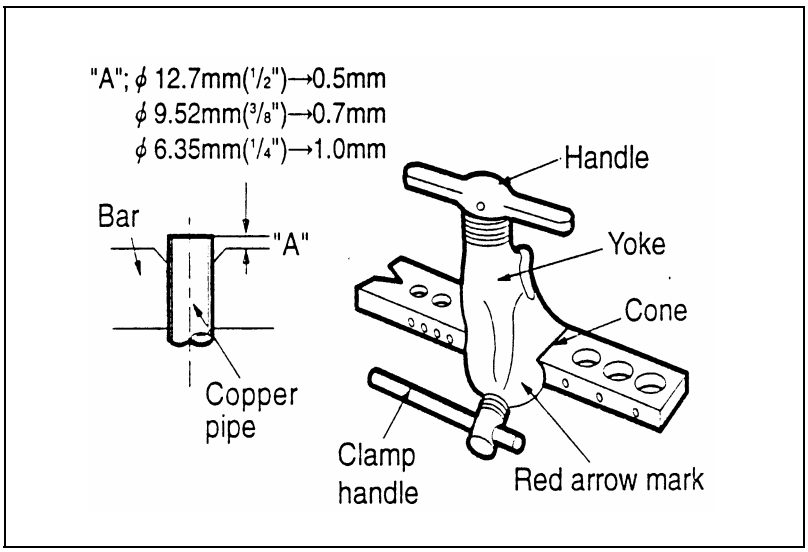

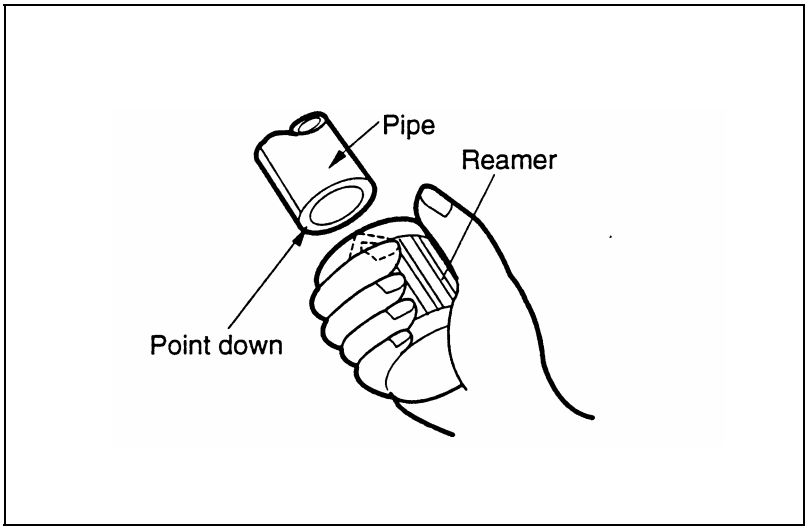

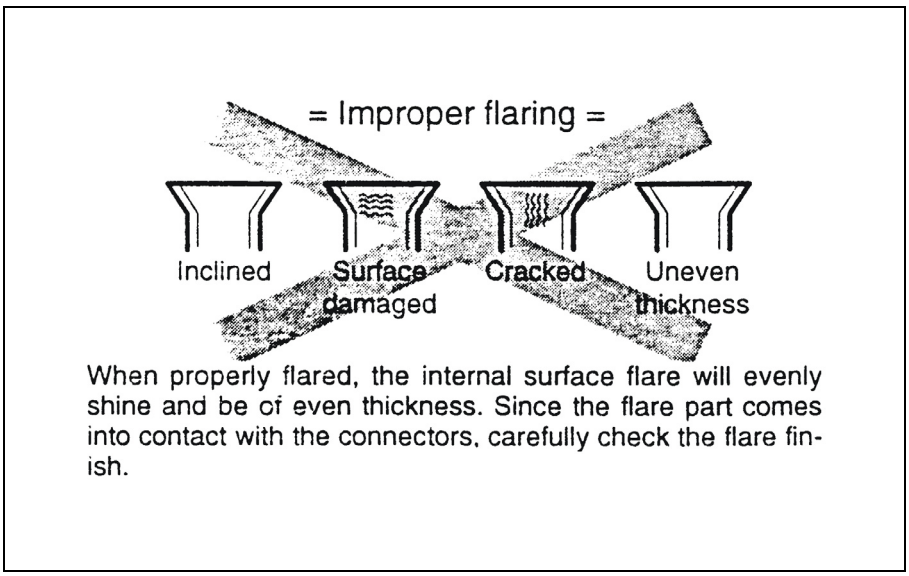

When properly flared, the internal surface flare will evenly shine and be of even thickness. Since the flare part comes into contact with the connectors, carefully check the flare finish.

Все каталоги и инструкции здесь: https://splitsystema48.ru/instrukcii-po-ekspluatacii-kondicionerov.html

2) Remove burrs

- ☞ Remove burrs from cut edges of pipes.
- ☞ Turn the pipe end down to avoid the metal powder entering the pipe.
- ☞ **Caution**: If the burrs are not removed, they may cause a gas leakage.

3) Flaring the pipes

- ☞ Insert the flare nuts, mounted on the connection ports of both indoor and outdoor units, onto the copper pipes. Some refrigerant gas may leak, when the flare nuts are removed from the indoor unit, as some gas is charged to prevent the inside of the pipe from rusting.
- ☞ Fit the copper pipe end into the bar of flare tool about 0~0.5mm higher.
- ☞ Flare the pipe ends.

4) Tape the flaring portion to protect it from the dust or damages.

- Indoor unit installation

☞ Hook the indoor unit onto the upper portion of installation plate. (Engage the two hooks of the rear top of the indoor unit with the upper edge of the installation plate.)

☞ Ensure the hooks are properly seated on the installation plate by moving it in left and right.

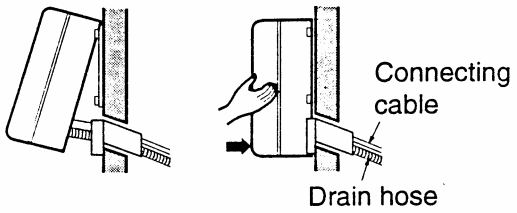

Press the lower left and right side of the unit against the installation Plate until the hooks engages with their slots(sound click).

Все каталоги и инструкции здесь: https://splitsystema48.ru/instrukcii-po-ekspluatacii-kondicionerov.html

- Connecting the piping to the indoor unit
  - ☞ Align the center of the piping and sufficiently tighten flare nut with fingers.
  - ☞ Finally, tighten the flare nut with torque wrench until the wrench clicks.
  - ☞ Wrench tightening the flare nut torque wrench, ensure the direction for tightening follows the arrows on the wrench.

Pipe Size	Torque
Liquid Side(ϕ6 or 1/4 inch)	1.8 kg.m
Liquid Side (ϕ10 or 3/8 inch)	3.5 kg.m
Liquid Side(ϕ12 or 1/2 inch)	5.5 kg.m
Gas Side (ϕ10 or 3/8 inch)	3.5 kg.m
Gas Side(ϕ12 or 1/2 inch)	5.5 kg.m
Gas Side(ϕ16 or 5/8 inch)	7.5 kg.m
Gas Side(ϕ19 or 3/4 inch)	10.0 kg.m

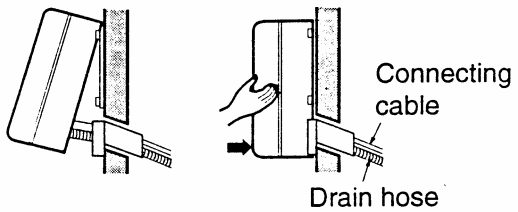

Press the lower left and right side of the unit against the installation Plate until the hooks engages with their slots(sound click).

- Wrap the insulation material around the connecting portion.

Все каталоги и инструкции здесь: https://splitsystema48.ru/instrukcii-po-ekspluatacii-kondicionerov.html

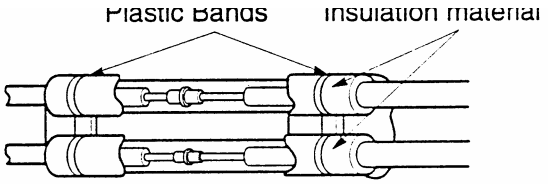

Wrap the insulation material around the connecting portion.

4. CONNECTING PIPINGS AND THE CABLE TO OUTDOOR UNIT

- Connecting the piping to outdoor unit
  - ☞ Align the center of the piping and sufficiently tighten the flare nut with fingers.
  - ☞ Finally, tighten the flare nut with torque wrench until the wrench clicks.
  - ☞ When tightening the flare nut with torque wrench, ensure the direction for tightening follows the arrows on the wrench.

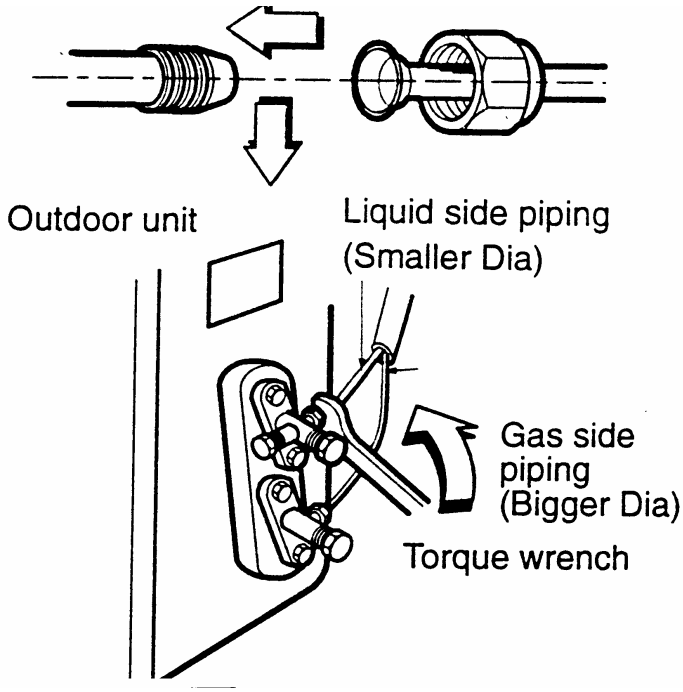

Все каталоги и инструкции здесь: https://splitsystema48.ru/instrukcii-po-ekspluatacii-kondicionerov.html

Pipe Size	Torque
Liquid Side(ϕ6 or 1/4 inch)	1.8 kg.m
Liquid Side (ϕ10 or 3/8 inch)	3.5 kg.m
Liquid Side(ϕ12 or 1/2 inch)	5.5 kg.m
Gas Side (ϕ10 or 3/8 inch)	3.5 kg.m
Gas Side(ϕ12 or 1/2 inch)	5.5 kg.m
Gas Side(ϕ16 or 5/8 inch)	7.5 kg.m
Gas Side(ϕ19 or 3/4 inch)	10.0 kg.m

- Connecting the cable to the outdoor unit as shown in OPERATING AND INSTALLATION INSTRUCTIONS MANUAL.

5. CHECKING THE DRAINAGE AND CONNECTING THE CABLE TO INDOOR UNIT

- Checking the drainage

1) Remove the grille from the cabinet

☞ Set the up-and-down air direction louver to open position (horizontally) by finger pressure.

☞ Remove the screw caps and the securing screws.

☞ To remove the grille, pull the lower left and right side of the grille toward you (slightly titled) and lift it straight upward (Two tabs on the top inside edge of the grille are clear of their slots).

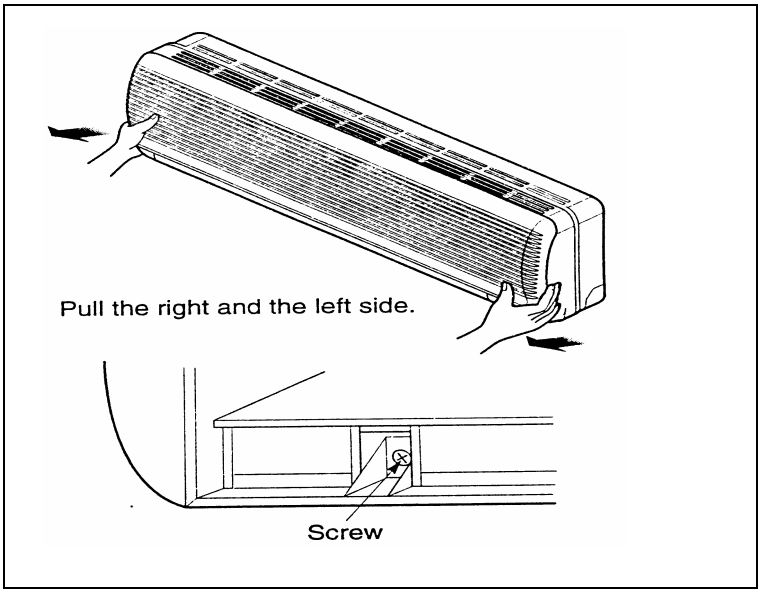

Все каталоги и инструкции здесь: https://splitsystema48.ru/instrukcii-po-ekspluatacii-kondicionerov.html

2) Check the drainage

☞ Pour glass of water on the evaporator.

☞ Ensure if water flows from drainage hose of indoor unit.

- Form the piping

☞ Wrap the connecting portion of indoor unit with the insulation material and secure it with two plastic bands (for the right piping).

☞ If you may connect an additional drainage hose, the end of the drainage-outlet should keep distance from the ground. (Do not dip it into water, and fix it on the wall to avoid swinging in the wind.)

- In case of the outdoor unit is installed below position of the indoor unit

☞ Tape the piping, drainage hose and connecting cable from down to up.

☞ Form the piping gathered by taping along the exterior wall and fix it onto the wall by saddle or equivalent.

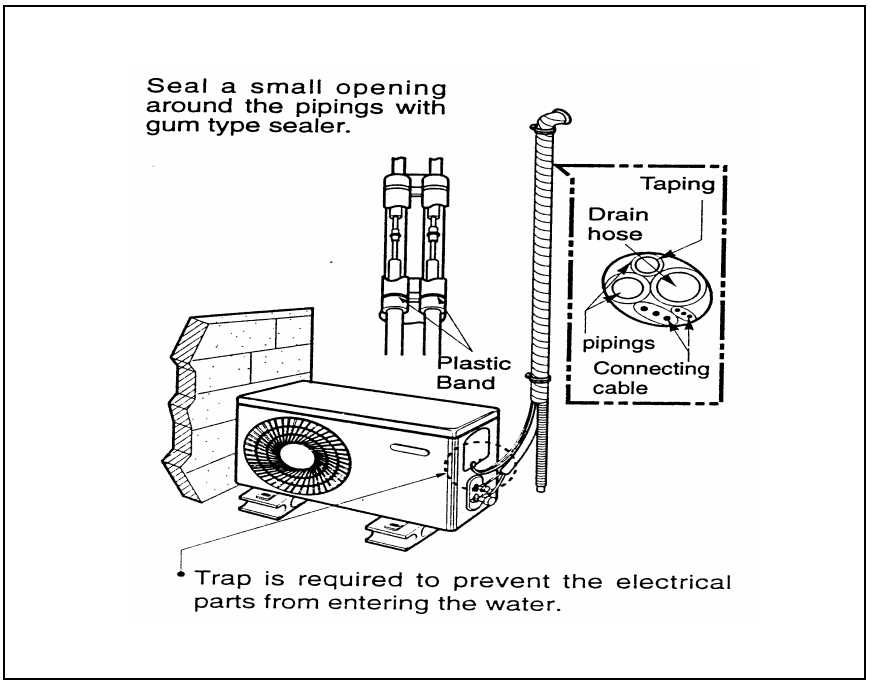

Все каталоги и инструкции здесь: https://splitsystema48.ru/instrukcii-po-ekspluatacii-kondicionerov.html

- In case of the outdoor unit is installed upper position of the indoor unit

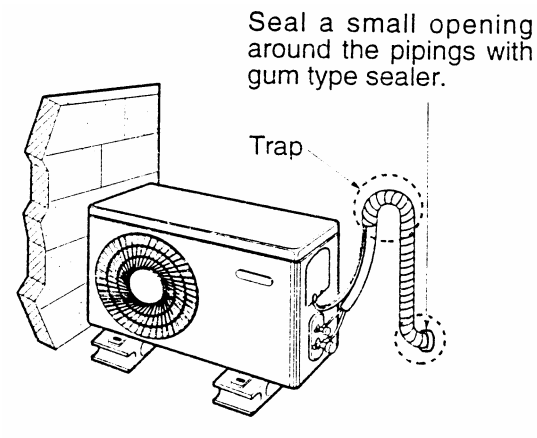

  - ☞ Tape the piping and connecting cable from down to up.
  - ☞ Form the piping gathered by taping along the exterior wall and the trap is required to prevent water from entering into the room.
  - ☞ Fix the piping onto the wall by saddle or equivalent.
- Connecting the cable to the indoor unit as shown in the OPERATING AND INSTALLATION INSTRUCTIONS MANUAL.

6. AIR PURING OF THE PIPINGS AND INDOOR UNIT

- Air purging preparation
  - ☞ Remove the caps from the 2-way and 3-way valves.
  - ☞ Remove the service-port cap from the 3-way valve.
  - ☞ To open the valve, turn the valve spindle of 2-way valve counter-clockwise approximate **90°** and hold it there for **5 seconds**, then close it.
  - ☞ **Caution**: Do not leak the gas in the air during air purging.

Все каталоги и инструкции здесь: https://splitsystema48.ru/instrukcii-po-ekspluatacii-kondicionerov.html

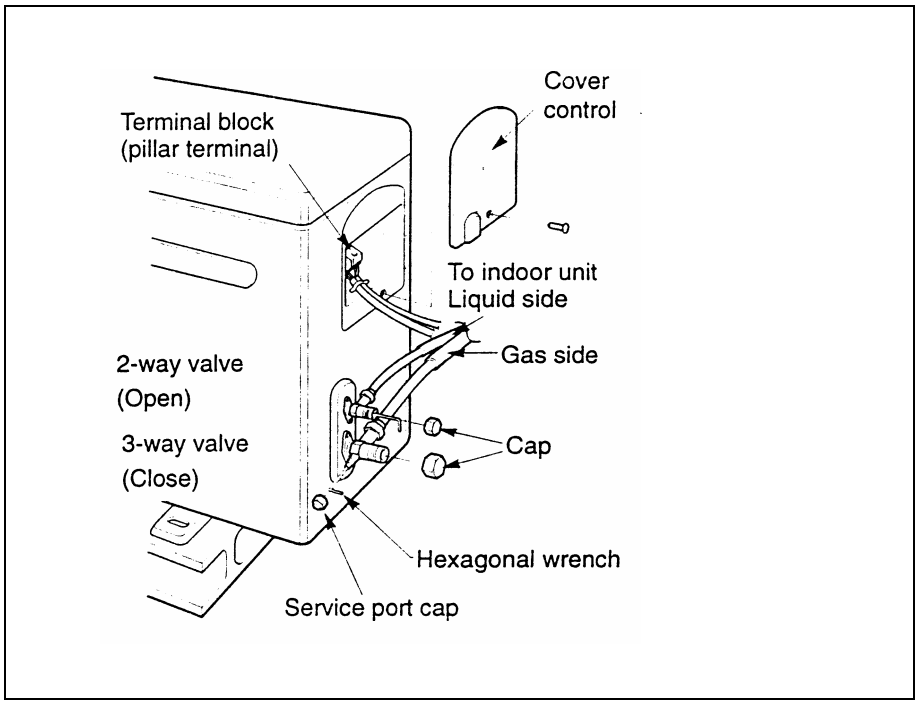

- Leakage checking
  - ☞ Check a gas-leakage of the connection portion of the piping.
  - ☞ If there is no leakage found, open 2-way again, turn the valve spindle counter-clockwise until it stops.
  - ☞ If there is leakage found, re-tighten the connecting portion with wrench. If the leakage persists, locate a leakage and repair it until leakage ceases.

Все каталоги и инструкции здесь: https://splitsystema48.ru/instrukcii-po-ekspluatacii-kondicionerov.html

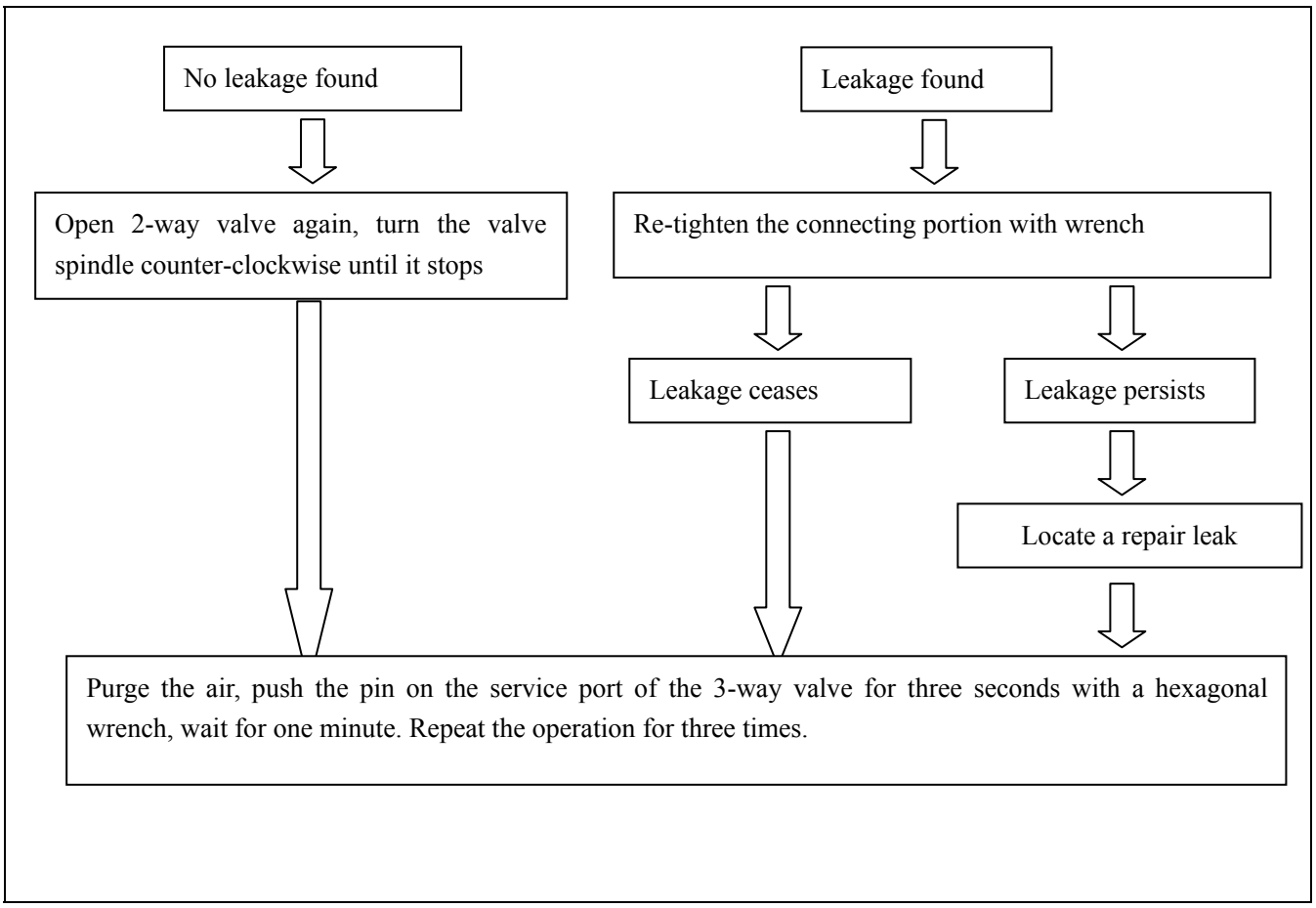

- Air purging
  - ☞ To purge the air, push the pin on the service port of 3-way valve for three seconds with a hexagonal wrench, wait for **one** minute.
  - ☞ Repeat the operation **three times**.
- Set the both 2-way and 3-way valves to open position with the hexagonal wrench for the unit operation.
- Checking a gas leakage for the left piping
  - ☞ Connect the manifold gauge to the service port of 3-way valve. Measure the pressure.
  - ☞ Keep it for **5~10 minutes**. Ensure if the pressure indicated on the gauge is as same as that of measured at the first time.

Все каталоги и инструкции здесь: https://splitsystema48.ru/instrukcii-po-ekspluatacii-kondicionerov.html

- Follow the result of right side piping.
- The additional gas for air purging has been charged in the outdoor unit. However, if the flare connections have not been done correctly and gas leaks a gas cylinder and the charge set will be needed.

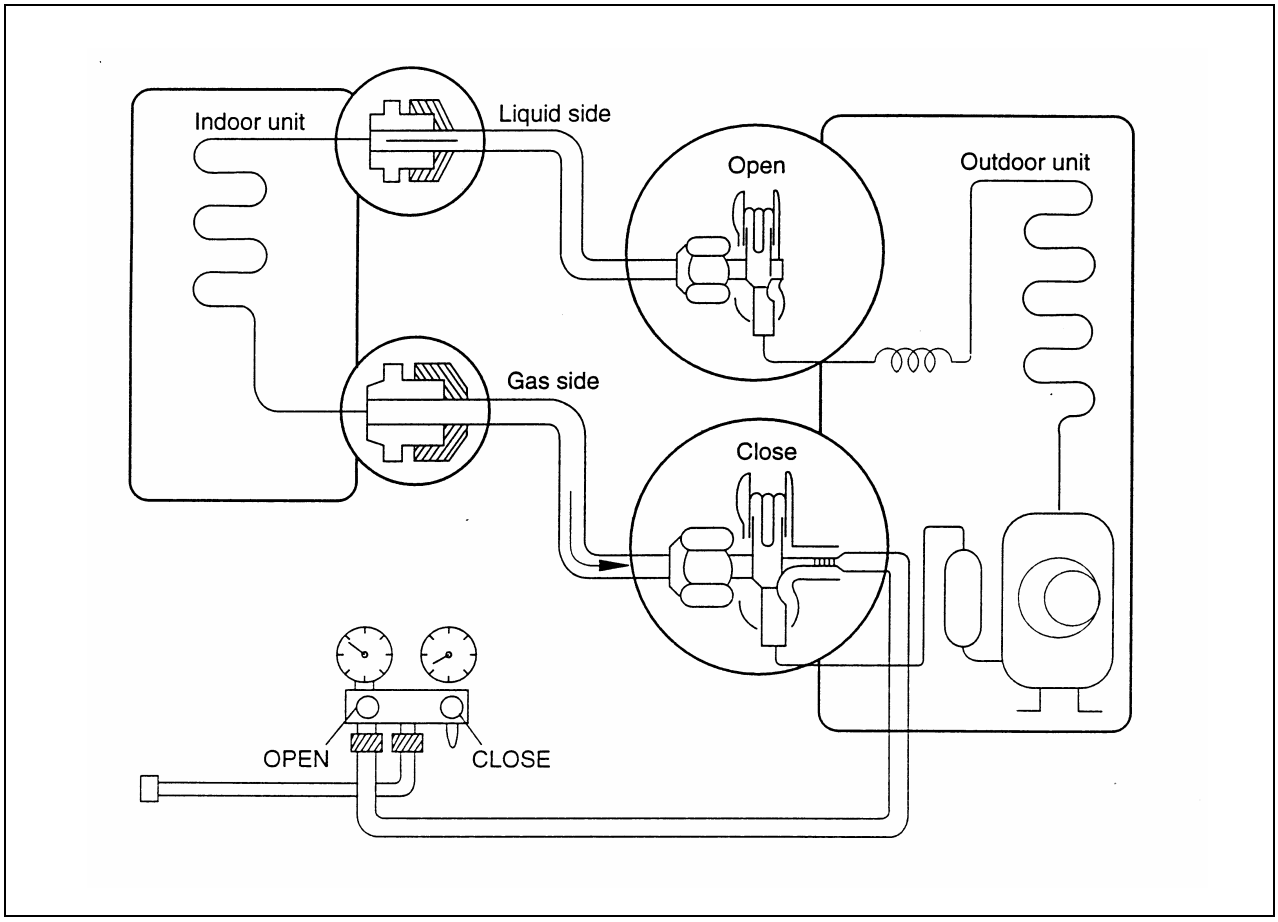

Все каталоги и инструкции здесь: https://splitsystema48.ru/instrukcii-po-ekspluatacii-kondicionerov.html

SERVICE

1. AIR PURGING (INSTALLATION)

- Required tools: hexagonal wrench, adjustable wrench, torque wrenches, wrench to hold the joints, and gas leak detector.
- The additional gas for air purging has been charged in the outdoor unit. However, if the flare connections have not been done correctly and gas leaks, a gas cylinder and the charge set will be needed.
- The air in the indoor unit and in the piping must be purged. If air remains in the refrigerant pipes, it will affect the compressor, reduce the cooling and heating capacity, and could lead to a malfunction.

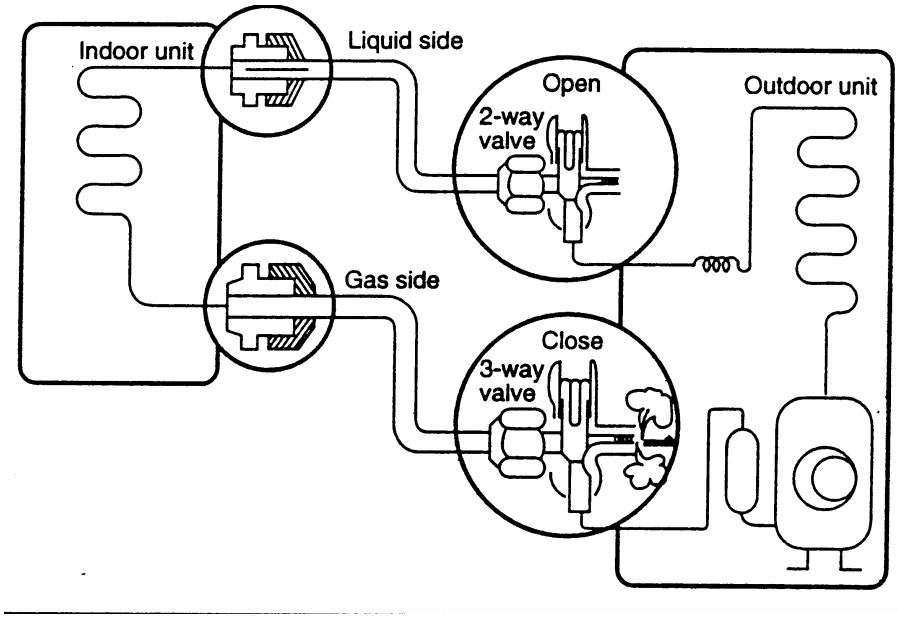

- Be sure to use a torque wrench to tighten the service port cap (after using the service port),so that it prevents the gas leakage from the refrigeration cycle.
- **Caution**: Do not leak the gas in the air during air purging.

Все каталоги и инструкции здесь: https://splitsystema48.ru/instrukcii-po-ekspluatacii-kondicionerov.html

- Air purging procedure
  - ☞ Recheck the piping connections.
  - ☞ Open the valve spindle of the 2-way valve counter-clockwise proximately **90°**,wait **10 seconds**, and then set it to closed position. **Be sure to use a hexagonal wrench to operate the spindle**.
  - ☞ Check the flare connections for refrigerant gas leakage.
  - ☞ Purge the air from the system. Set the 2-way valve to the open position and remove the cap from the 3-way valve's service port. Using the hexagonal wrench to press the valve core pin, discharge for **three seconds** and then wait for **one minute**. Repeat this **three** times.
  - ☞ Use torque wrench to tighten the service port cap to a torque of 1.8kg.cm.
  - ☞ Set the 3-way valve to the back seat.
  - ☞ Mount the valve caps to the 2-way and 3-way valves.
  - ☞ Check for gas leakage. At this time, especially check for gas leakage from the 2-way and 3-way valve's caps, and from the service port cap.
- **Caution**: If gas leakage is discovered, take the following measures.
  - ☞ If the gas leakage stops when the piping connections are tightened further, continue working.
  - ☞ If the gas leakage does not stop when the piping connections are tightened, repair the location of the leakage, discharge all of the gas through the service port, and then recharge with the specified amount of gas from a gas cylinder.

Все каталоги и инструкции здесь: https://splitsystema48.ru/instrukcii-po-ekspluatacii-kondicionerov.html

2. PUMPING DOWN (BEFORE RE-INSTALLATION)

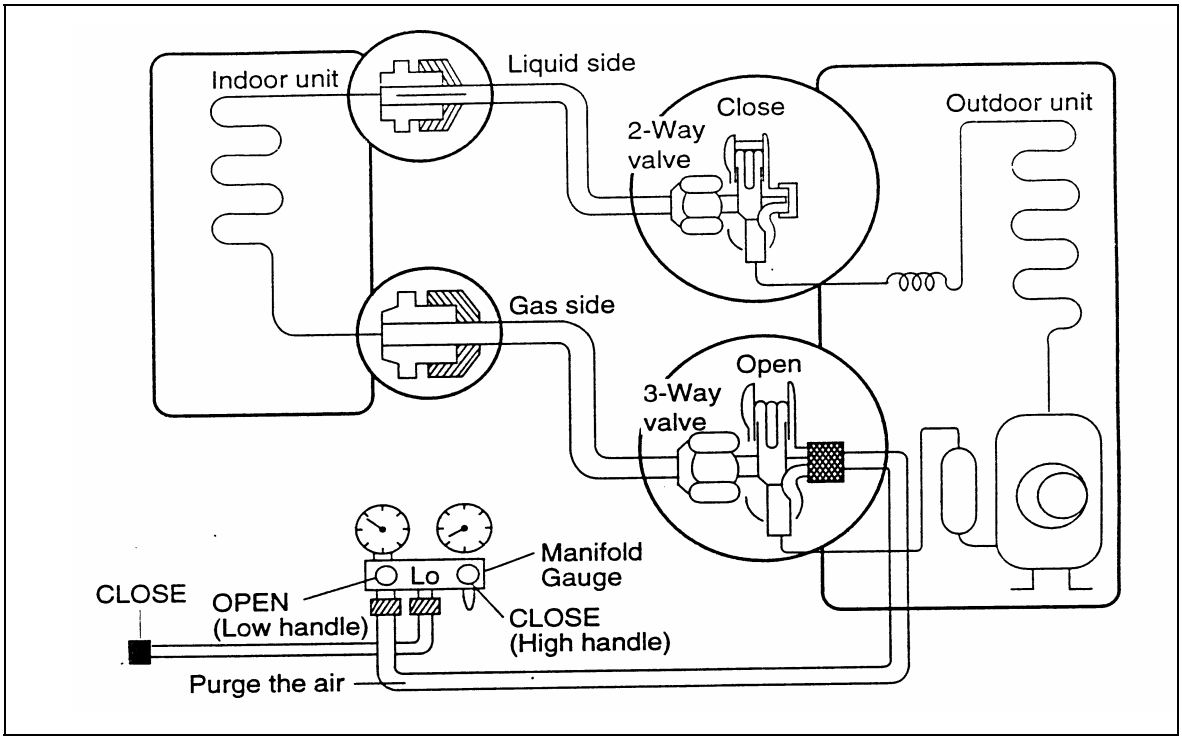

- Confirm that both the 2-way and 3-way valves are set to the **open** position.
  - ☞ Remove the valve caps and confirm that the valve spindles are in the **open** position.
  - ☞ Be sure to use a hexagonal wrench to operate the valve spindle.
- Operate the unit for **10~15 minutes**.
- Stop operation and wait for **3** minutes, then connect the charge set to the service port of the3-way valve.
  - ☞ Connect the charge hose with the push pin to the service port.
- Air purging of the charge hose
  - ☞ Open the low-pressure valve on the charge set slightly to purge air from the charge hose.
- Set the 2-way valve to the closed position.
- Operate the air conditioner at the cooling cycle and stop it when the gauge indicates 1kg/cm^2.g.

Все каталоги и инструкции здесь: https://splitsystema48.ru/instrukcii-po-ekspluatacii-kondicionerov.html

- Immediately set the 3-way valve to the closed position.
  - ☞ Do this quickly so that the gauge ends up indicating 3 to 5kg/cm^2.g.
- Disconnect the charge set, and amount the 2-way and 3-way valve's caps and the service port cap.
  - ☞ Use torque wrench to tighten the service port cap to a torque of 1.8 kg.m.
  - ☞ Be sure to check for gas leakage.

3. RE-AIR PURGING FOR RE-INSTALLATION

- Confirm that both the 2-way valve and the 3-way valve are set to the closed position.
- Connect the charge set and a gas cylinder to the service port of the 3-way valve.
  - ☞ Leave the valve on the gas cylinder closed.
- Air purging
  - ☞ Open the valves on the gas cylinder and the charge set. Purge the air by loosening the flare nut on the 2-way valve approximately **45°**for **3 seconds**, then closing it for **1 minute**. Repeat **3** times.
  - ☞ After purging the air, use a torque wrench to tighten the flare nut on the 2-way valve.

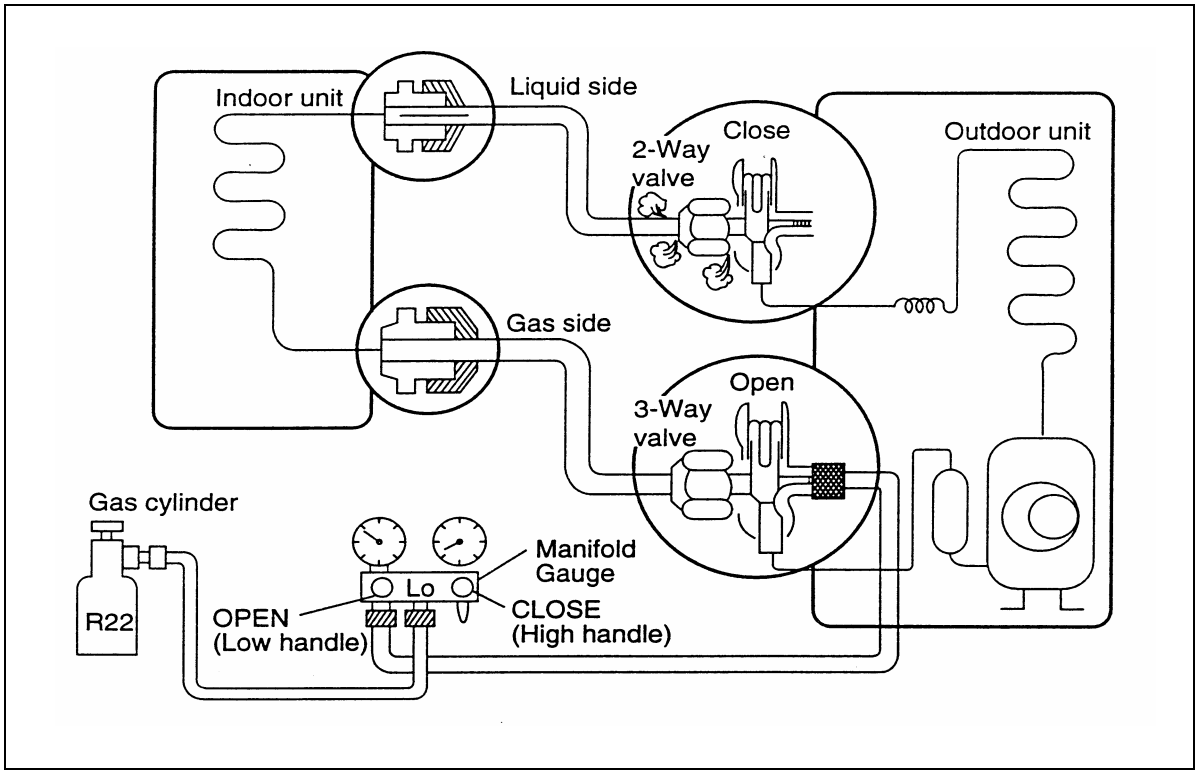

Все каталоги и инструкции здесь: https://splitsystema48.ru/instrukcii-po-ekspluatacii-kondicionerov.html

- Check the flare connections for gas leakage.
- Disconnect the charge set and the gas cylinder, and set the 2-way and 3-way valves to the open position.
  - ☞ Be sure to use a hexagonal wrench to operate the valve spindles.
- Mount the valve caps and the service port cap.
  - ☞ Use torque wrench to tighten the service port cap to a torque of 1.8kg.m.
  - ☞ Be sure to check for gas leakage.
- **Caution**: Do not leak the gas in the air during air purging.

4. BALANCE REFRIGERANT OF THE 2-WAY, 3-WAY VALVES (GAS LEAKED)

- Confirm that both the 2-way and 3-way valves are set to the back seat.
- Connect the charge set to the 3-way valve's service port.
  - ☞ Leave the valve on the charge set closed.
  - ☞ Connect the charge hose with the push pin to the service port.

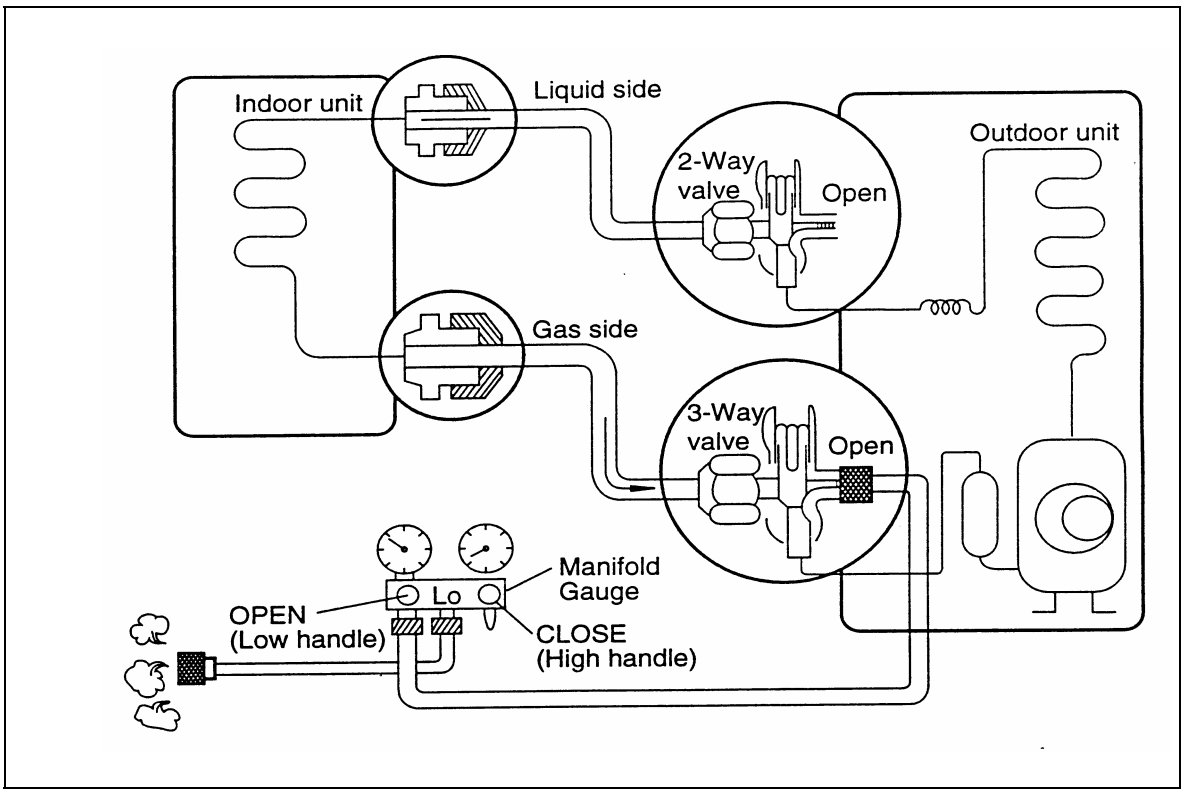

Все каталоги и инструкции здесь: https://splitsystema48.ru/instrukcii-po-ekspluatacii-kondicionerov.html

- Open the valve (Low side) on the charge set and discharged the refrigerant until the gauge indicates 0kg/cm^2.g.
  - ☞ If there is no air in the refrigerant cycle (the pressure when the air conditioner is not running is higher than 1 kg/cm^2.g), discharge the refrigerant until the gauge indicates 0.5 to 1 kg/cm^2.g.If this is the case, it will not be necessary to apply an evacuation.
  - ☞ Discharge the refrigerant gradually. If it is discharged too suddenly, the refrigeration oil will also be discharged.

5. EVACUATION (ALL AMOUNT OF REFRIGERANT LEAKED)

- Connect the vacuum pump to the charge set's center hose.
- Evacuating for approximately one hour.
  - ☞ Confirm that the gauge needle has moved toward -76cmHg (vacuum of 4 mmHg or less)
- Close the valve (Low side) on the charge set, turn off the vacuum pump, and confirm that the gauge needle does not move (approximately 5 minutes after turning off the vacuum pump).
- Disconnect the charge hose from the vacuum pump.
  - ☞ If the vacuum pump oil becomes dirty or depleted, replenish as needed.

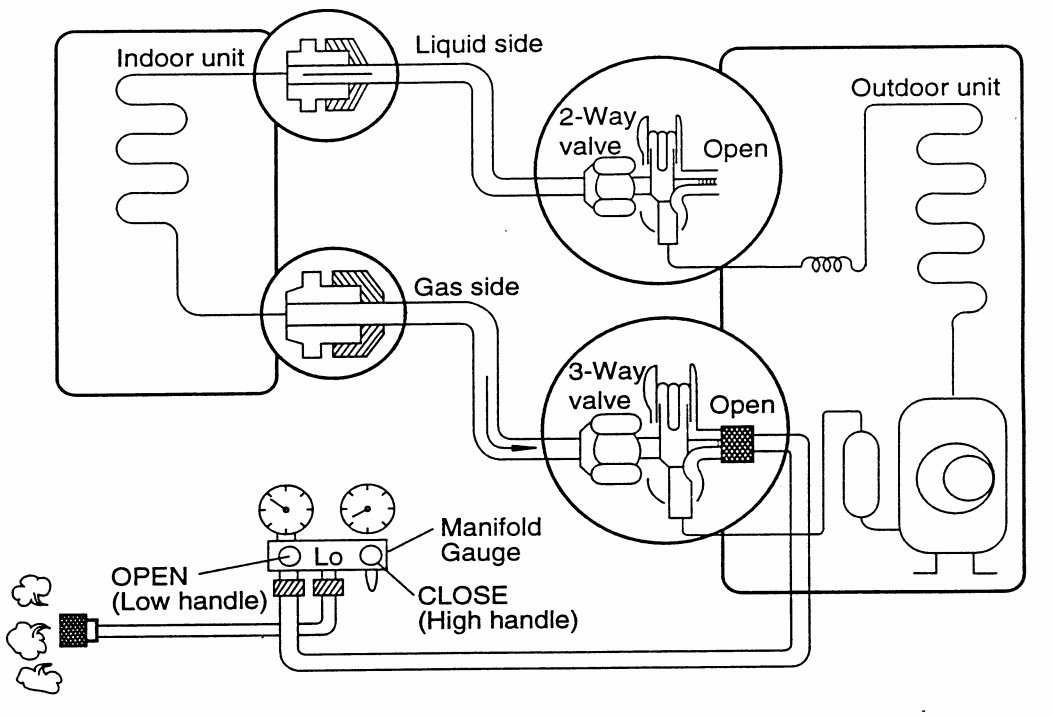

Все каталоги и инструкции здесь: https://splitsystema48.ru/instrukcii-po-ekspluatacii-kondicionerov.html

6. GAS CHARGING (AFTER EVACUATION)

- Connect the charge hose to the charging cylinder.
  - ☞ Connect the charge hose which you disconnected from the vacuum pump to the valve at the bottom of the cylinder.
  - ☞ If you are using a gas cylinder, also use a scale and level the cylinder so that the system can be charged with liquid.
- Purge the air from the charge hose.
  - ☞ Open the valve at the bottom of the cylinder and press the check valve on the charge set to purge the air. (Be careful of the liquid refrigerant). The procedure is the same if using a gas cylinder.
- Open the valve (Low side on the charge set) and charge the system with liquid refrigerant.
  - ☞ If the system can not be charged with the specified amount of refrigerant, it can be charged with a little at a time (approximately 150g each time) while operating the air conditioner in the cooling cycle. However, one time is not sufficient, wait approximately 1 minute and then repeat the procedure (pumping down pin).
  - ☞ This is different from previous procedures. Because you are charging with liquid refrigerant from the gas side, absolutely do not attempt to charge with larger amounts of liquid refrigerant while operating the air conditioner.
- Immediately disconnect the charge hose from the 3-way valve's service port.
  - ☞ Stopping partway will allow the gas to be discharged.
  - ☞ If the system has been charged with liquid refrigerant while operating the air conditioner before disconnecting the hose.
- Mount the valve caps and service port cap.
  - ☞ Use torque wrench to tighten the service port cap to a torque of 1.8kg.m.
  - ☞ Be sure to check for gas leakage.

Все каталоги и инструкции здесь: https://splitsystema48.ru/instrukcii-po-ekspluatacii-kondicionerov.html

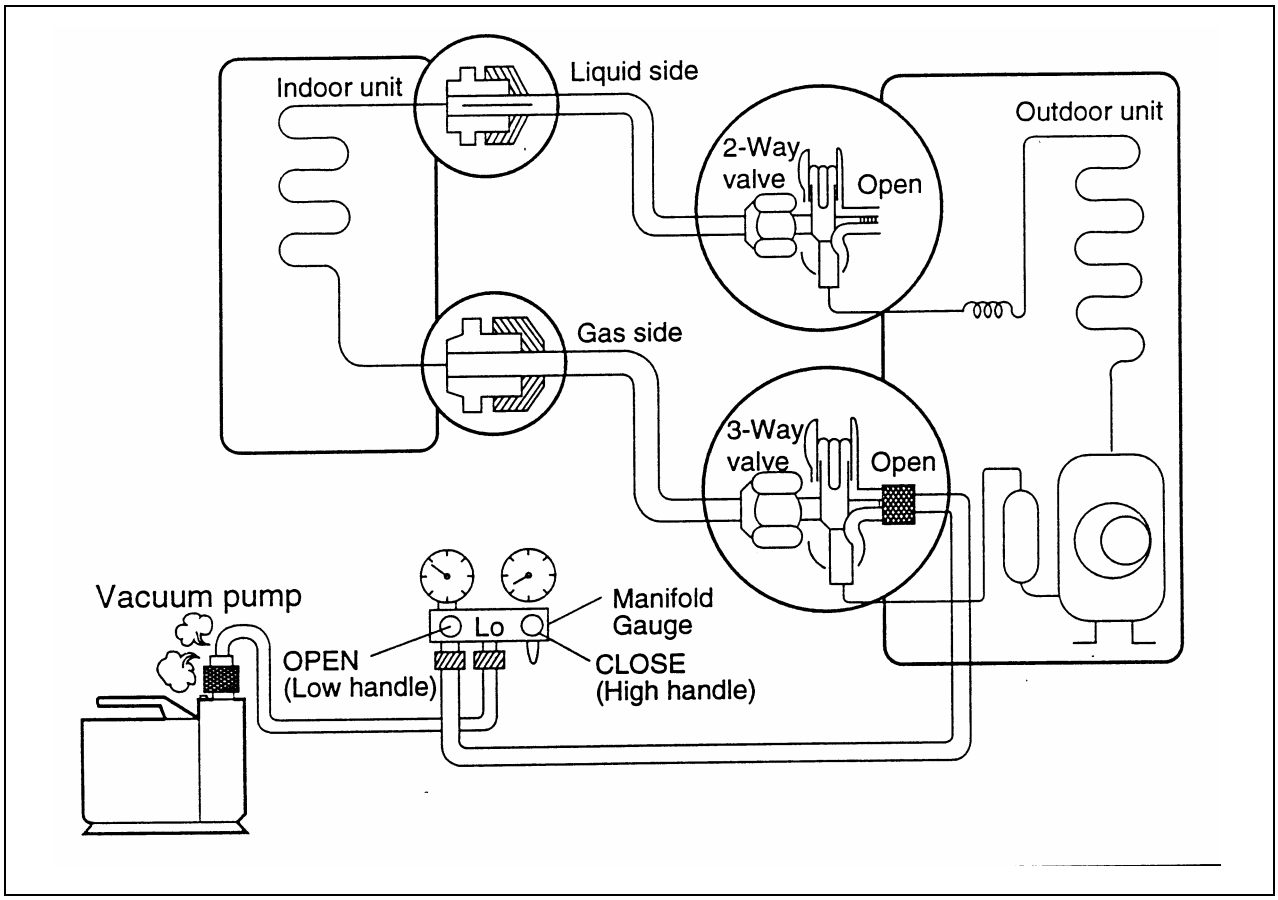

Все каталоги и инструкции здесь: https://splitsystema48.ru/instrukcii-po-ekspluatacii-kondicionerov.html

TROUBLESHOOTING

1. REFRIGERATION CYCLE SYSTEM

- In order to diagnose malfunctions, make sure that there is no electrical problems before inspecting the refrigeration cycle. Such problems include insufficient thermal insulation, problem with the power supply, malfunction of a compressor and indoor or outdoor fan motor.
- The normal indoor outlet air temperature and pressure of the refrigeration cycle depends upon various conditions. The standard values for them are shown in the following table.

Normal Pressure and Outlet Air Temperature

	Gas Pressure MPa(kg/cm^2.g)	Outlet Air Temperature ℃
Cooling Mode	0.4~0.6(4~6)	12~16

*Condition: Cooling mode; Indoor fan speed: High; Outdoor DB temperature: 35℃; Indoor DB temperature: 27℃

- Checking procedure

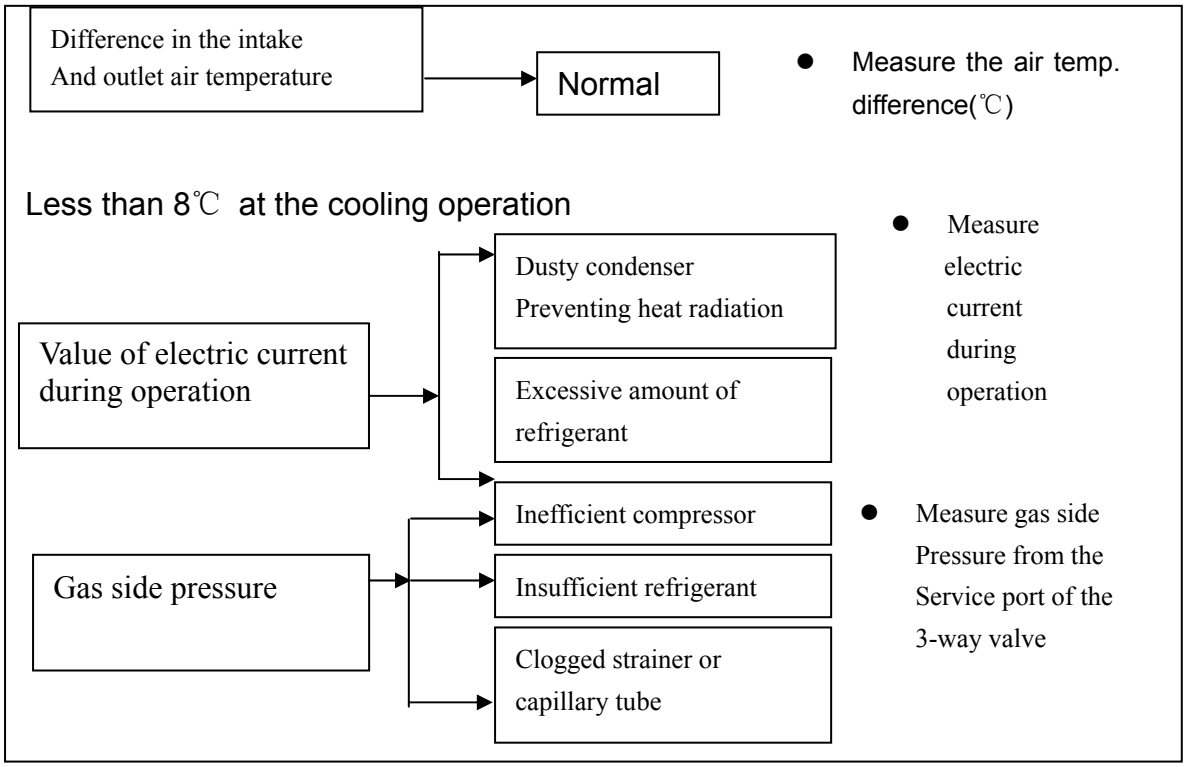

Все каталоги и инструкции здесь: https://splitsystema48.ru/instrukcii-po-ekspluatacii-kondicionerov.html

2. RELATION BETWEEN THE CONDITION OF THE AIR CONDITIONER AND PRESSURE AND ELECTRIC CURRENT IN COOLING OPERATION

- Carry out the measurements of pressure, electric current and temperature fifteen minutes after an operation is started.

Condition of the air conditioner	Lower pressure	High pressure	Electric current during operation
Insufficient refrigerant (gas leakage)	Decreased	Decreased	Decreased
Clogged capillary tube or strainer	Decreased	Decreased	Decreased
Short circuit in the indoor unit	Decreased	Decreased	Decreased
Heat radiation deficiency of the outdoor unit	Increased	Increased	Increased
Inefficient compression	Increased	Decreased	Decreased

3. DIAGNOSIS METHODS OF A MALFUNCTION OF A COMPRESSOR

Nature of fault	Symptom
Inefficient compressing of a compressor	☞ Electric current during operation becomes approximately 20% lower than the normal value. ☞ The discharge tube of the compressor becomes abnormally hot (normally 70 to 90℃) ☞ The difference between high pressure and low pressure becomes almost zero.
Locked compressor	☞ Electric current reaches a high level abnormally, and the value exceeds the limit of an ammeter. In some cases, a breaker turns OFF. ☞ The compressor has a humming sound.

Все каталоги и инструкции здесь: https://splitsystema48.ru/instrukcii-po-ekspluatacii-kondicionerov.html

4. TROUBLE SUSPENSION TABLE

SYMPTON	PROBABLE CAUSE	CORRECTIVE ACTION
The RUN indicator (green)does not light up	The power source voltage is lower than 198V	Repair the power supply
	No voltage	Repair general wiring
	Correct voltage	Replace control P.C.B or display P.C.B
	The remote controller batteries are used up	Reload new batteries
The indoor fan does not function correctly	No voltage between indoor fan motor terminals	Replace the control P.C.B
	Indoor fan motor is broken	Replace indoor fan motor
The outdoor fan does not function correctly	No voltage between outdoor fan motor terminals on the indoor power P.C.B	Replace the control P.C.B
	No voltage between outdoor fan motor terminals on the outdoor unit	Check and repair electrical wiring between indoor and outdoor units
	Outdoor fan is blocked	Remove obstructions
	Outdoor fan motor is broken	Replace outdoor fan motor
	Outdoor fan motor capacitor is broken	Replace capacitor
The compressor does not start up	No voltage between compressor terminals on the indoor unit	Repair control P.C.B
	Low voltage between compressor terminals on the indoor unit	Repair control P.C.B
	No voltage between compressor terminals on the outdoor unit	Repair electrical wiring between indoor and outdoor units
	The running capacitor is broken	Replace running capacitor
	OLP of compressor trips	Wait for one hour or so
	Compressor winding shorted or broken	Replace compressor

Все каталоги и инструкции здесь: https://splitsystema48.ru/instrukcii-po-ekspluatacii-kondicionerov.html

SYMPTON	PROBABLE CAUSE	CORRECTIVE ACTION
The refrigeration system does not function correctly	Check for leakage or restriction with ammeter, pressure gauge or surface thermometer	Repair refrigeration system and charge refrigerant if necessary
No cooling or heating, only indoor fan operates	Something wrong with power P.C.B	Replace control P.C.B
	Outdoor fan motor faulty or other fault caused compressor OLP trips	Remove obstruction or other fault
No cooling or heating, indoor and outdoor fan operate	Compressor OLP trips because of low voltage, high temperature,R22 leakage, little outdoor air circulation and etc	Check the problems and try again one hour later
	Running capacitor faulty	Replace running capacitor
	Compressor is broken	Replace compressor
Water accumulates and overflows from indoor unit	Drainage hose or port of drainage pan clogged	Remove clogged dirt
The air conditioner does not function at all with remote controller or AUX switch button on the indoor unit	Power supply failure	Repair power supply
	The secondary voltage of transformer is approximately 17VAC	Replace control P.C.B
	The secondary voltage of transformer is not approximately 17VAC	Replace transformer

5. Checking procedure of control circuit

Note: Do not check indoor and outdoor units at the same time. Be sure to check them one by one.

Все каталоги и инструкции здесь: https://splitsystema48.ru/instrukcii-po-ekspluatacii-kondicionerov.html

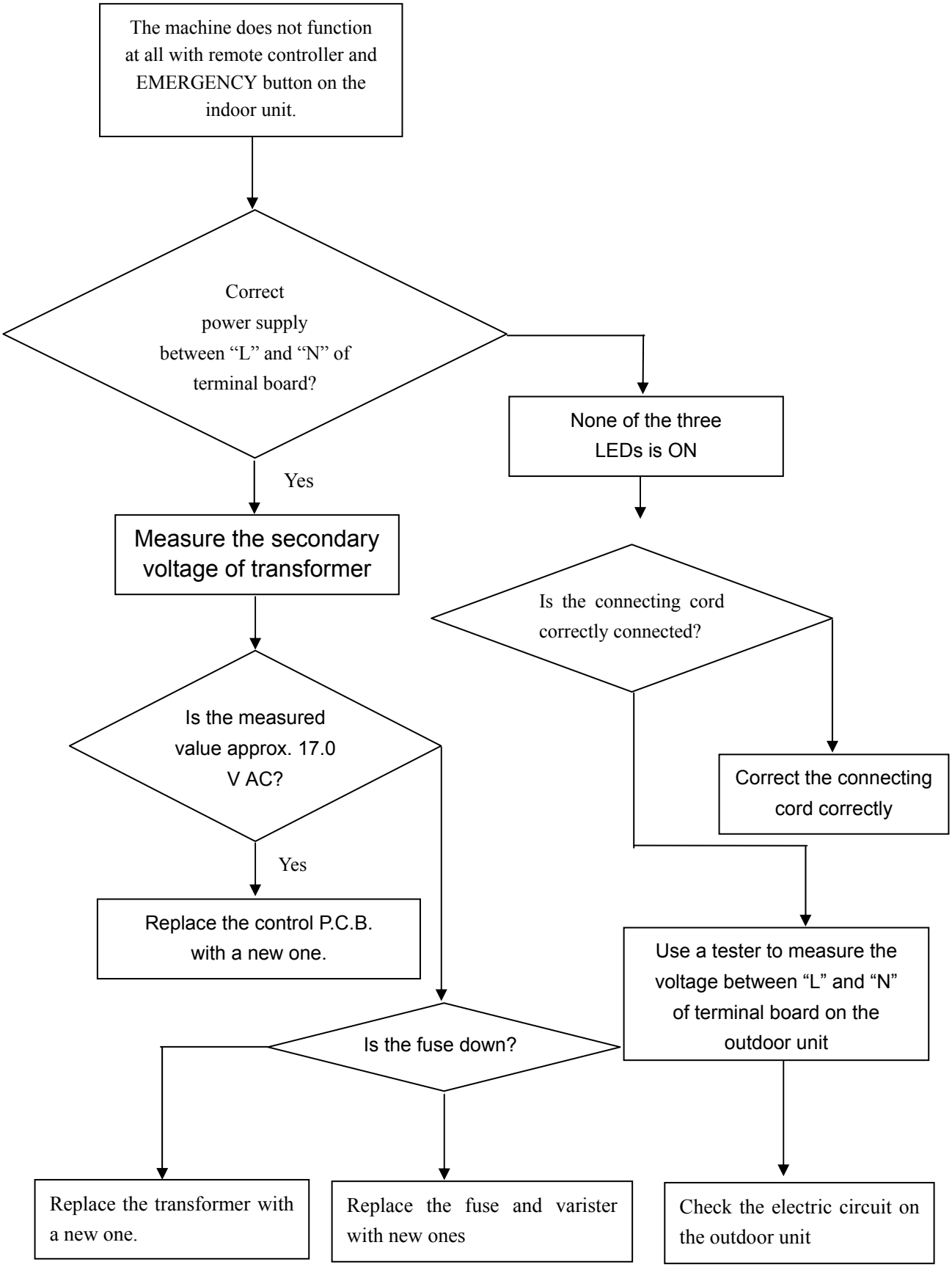

Все каталоги и инструкции здесь: https://splitsystema48.ru/instrukcii-po-ekspluatacii-kondicionerov.html

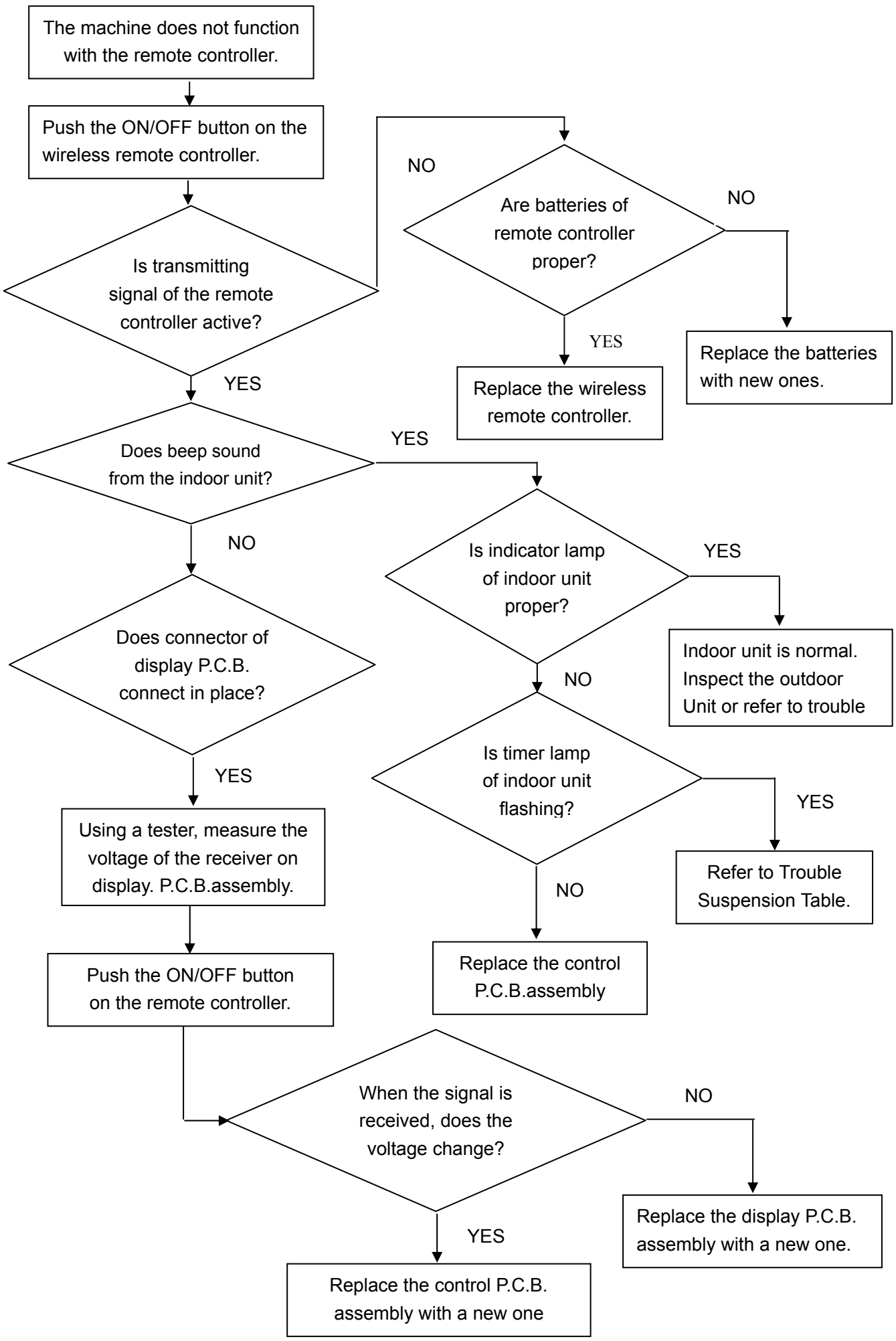

Все каталоги и инструкции здесь: https://splitsystema48.ru/instrukcii-po-ekspluatacii-kondicionerov.html

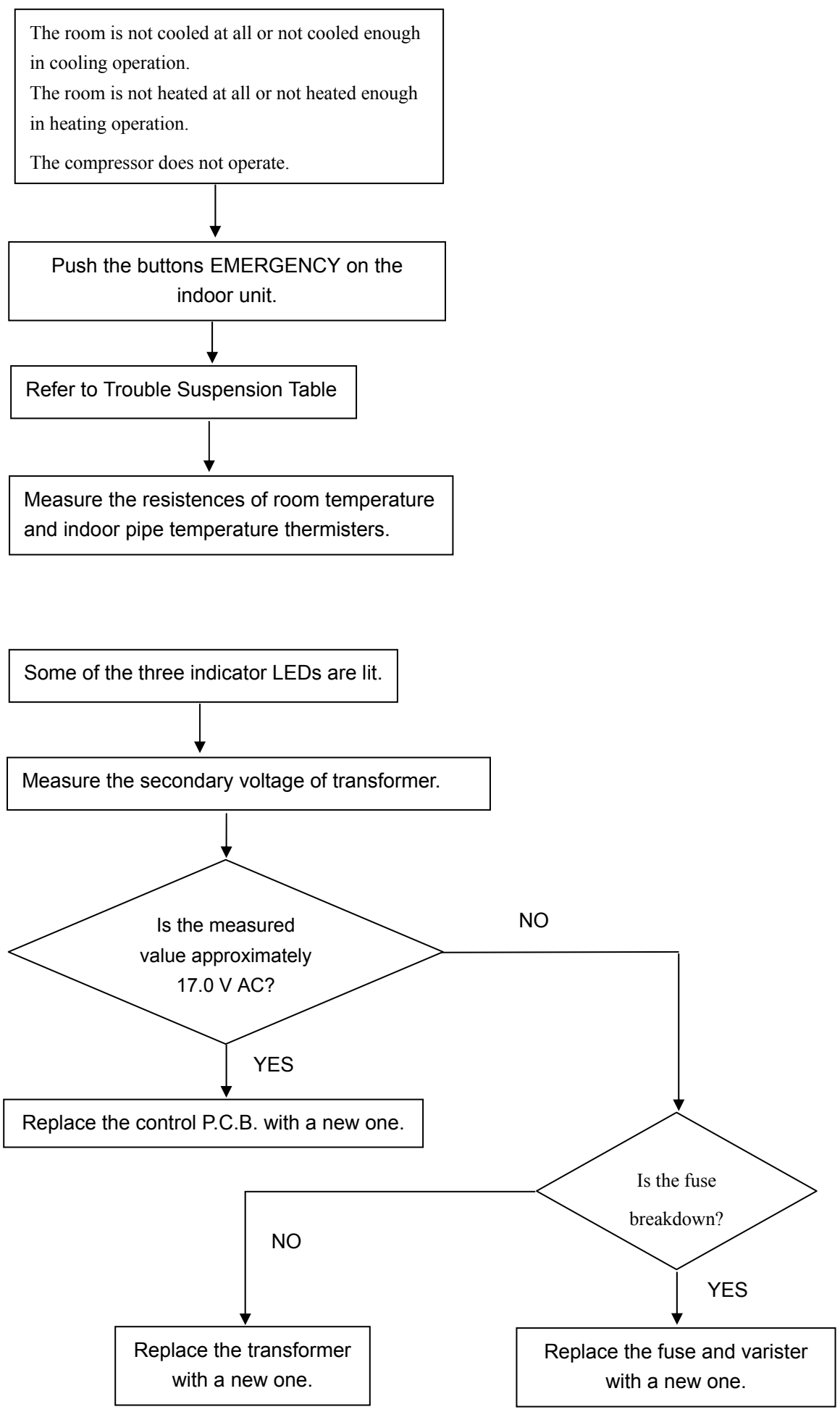

Все каталоги и инструкции здесь: https://splitsystema48.ru/instrukcii-po-ekspluatacii-kondicionerov.html

EXPLODED VIEW AND PART LIST

INDOOR UNIT

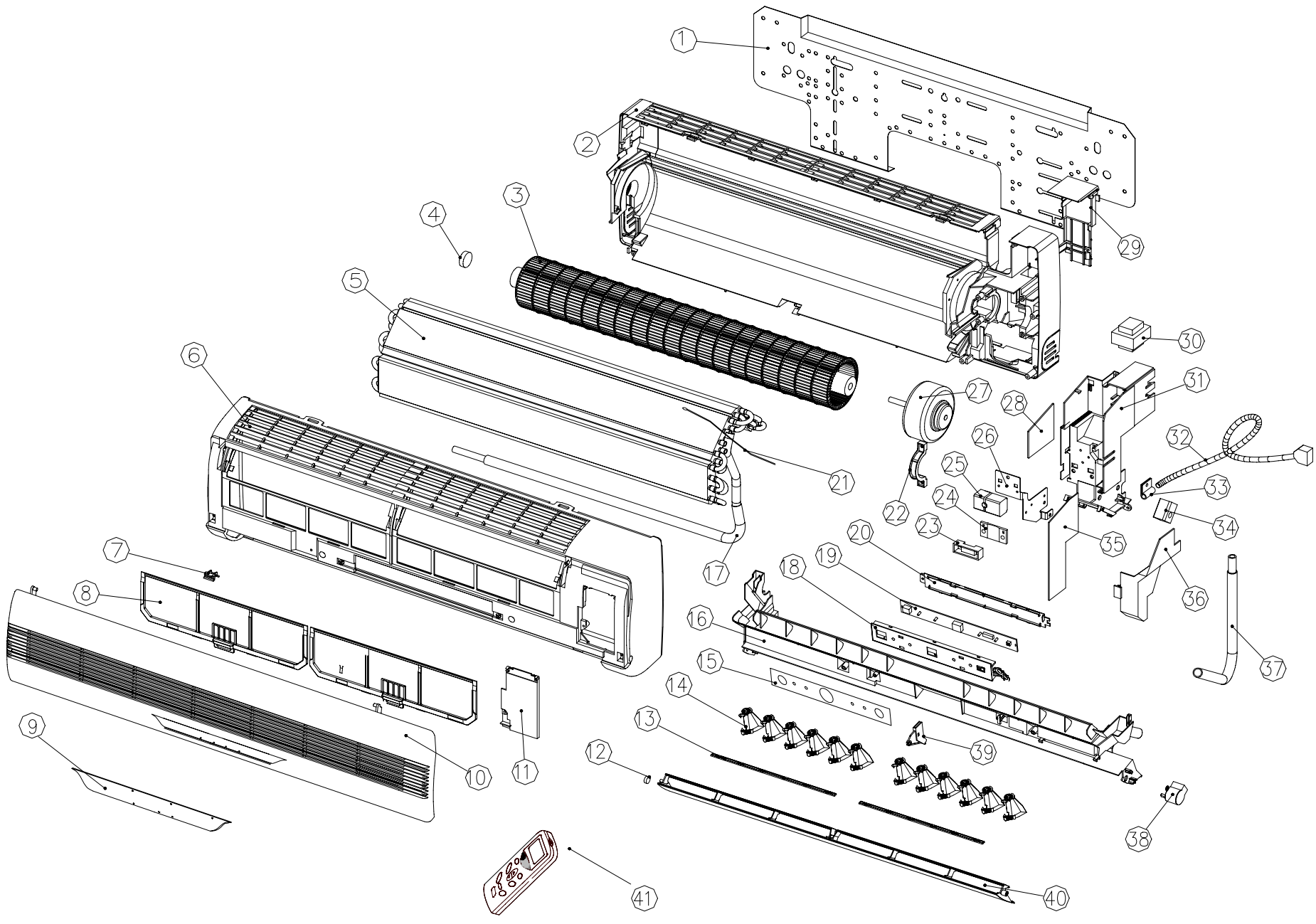

Все каталоги и инструкции здесь: https://splitsystema48.ru/instrukcii-po-ekspluatacii-kondicionerov.html

INDOOR UNIT

No.	Description	Part No.	Qty
1	Installation Plate	1203196	1
2	Chassis	810024	1
3	Indoor Fan	1402134-9	1
4	Indoor Fan Bearing	120236	1
5	Evaporator Assembly	130174	1
6	Cabinet	810045	1
7	Air Filter	130626	2
8	Front Cover (D)	1006208	1
8a	Front Cover (M)	81006229	1
9	Display Panel	814083	1
10	Signal Receiving Slot	140815	1
11	Indicator Cover	2107102	1
12	Horizontal Louver A	1201132	1
13	Horizontal Louver B	1201131	1
14	Vertical Deflector A	1201133	9
15	Vertical Deflector B	1201134	3
16	Louver Link	1201127	3
17	Louver Motor	1402136	1
18	Draining Pan	210657	1
19	Power Supply Cord	N/A	
20	Cable Clamp	N/A	
21	Receiver PCB Support	1102109	1
22	Display PCB Fixing Panel	1109133	1
23	Terminal Board 3PU	150264	1
24	Ring B	1203179	1
25	Pipe Assembly	13032974	1
26	Ring A	1203178	1
27	Bearing	N/A	
28	Indoor Fan Motor	1402153	1
29	Electric Box Cover	2109106	1
30	Electric Box	1005107	1
30a	Control PCB	81409181	1
31	Transformer	814052	1
32	Remote Controller	1401394-63	1
	Remote Controller	81401135-63	1
33	Thermistor	1411366	1
34	Display PCB	814093	1

Все каталоги и инструкции здесь: https://splitsystema48.ru/instrukcii-po-ekspluatacii-kondicionerov.html

OUTDOOR UNIT

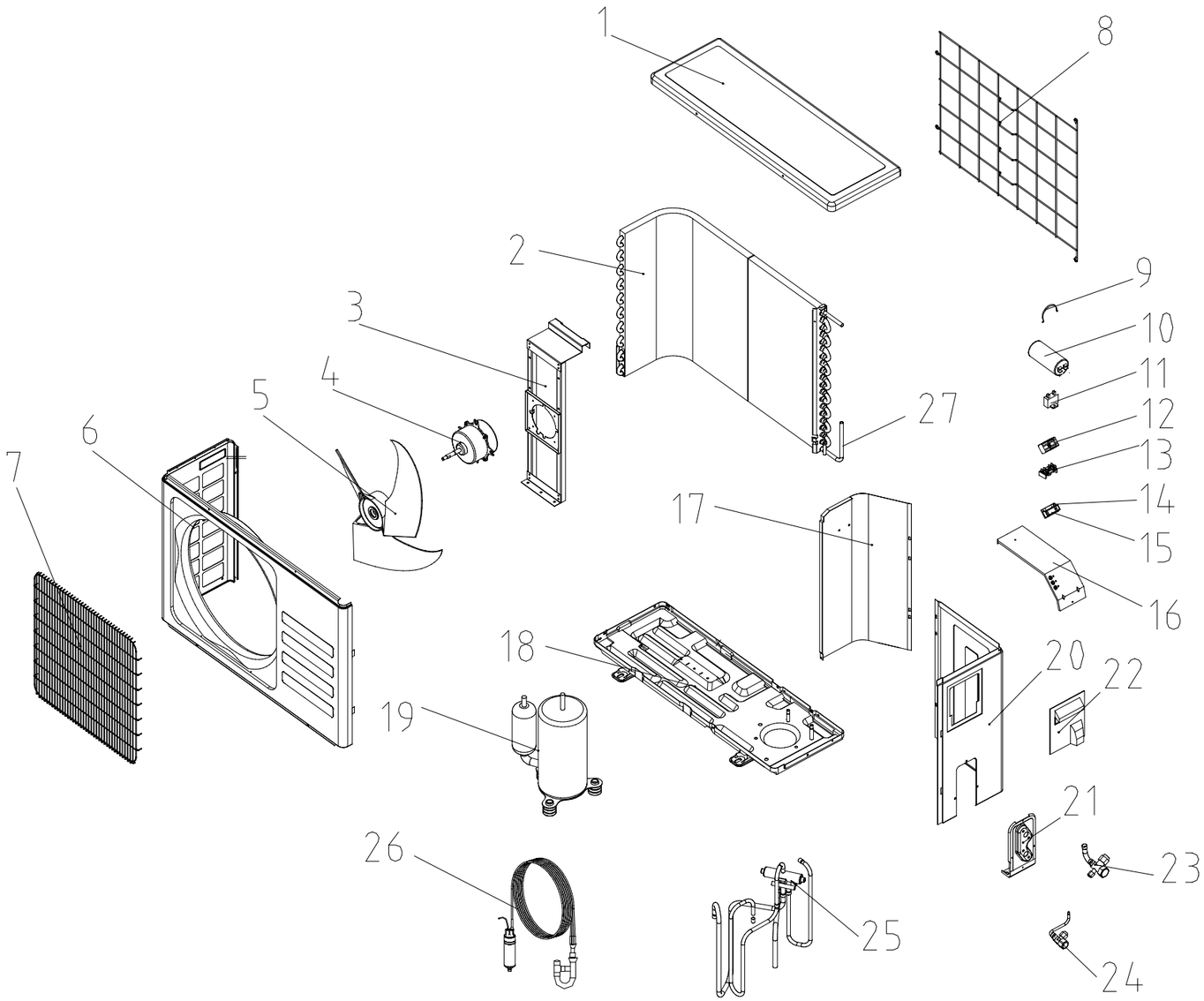

Все каталоги и инструкции здесь: https://splitsystema48.ru/instrukcii-po-ekspluatacii-kondicionerov.html

OUTDOOR UNIT

No.	DESCRIPTION	Part No.	Qty
1	Top Cover	810136	1
2	Condenser	813028	1
3	Motor Stay Bracket	811022	1
4	Outdoor Fan Motor	1402371	1
5	Outdoor Fan	1402181	1
6	Cabinet	810068	1
7	Fan Guard	821072	1
8	Back Lattice Plate	810093	1
9	Capacitor Fixing Ring	812031	1
10	Compressor Capacitor	141155	1
11	Fan motor Capacitor	141111	1
12	Terminal Board (5PU)	150262	1
13	Terminal Board (2PU)	150217	1
14	Power Supply Cord Clamp 1	110963	1
15	Power Supply Cord Clamp 2	1109147	1
16	Electrical Assembly Plate	821022	1
17	Bulkhead	811091	1
18	Chassis	810025	1
19	Compressor	1304405	1
20	Right Side Plate	810032	1
21	Valve Fixing Plate	811092	1
22	Terminal Cover	821021	1
23	3 Way Valve Assembly	8130917	1
24	2 Way Valve Assembly	8130916	1
25	4 Way Valve	141187	1
25a	4 Way Valve Coil	1411458	1
26	Capillary Tube Assembly	8130324	1
27	Thermistor	1411989	1

Все каталоги и инструкции здесь: https://splitsystema48.ru/instrukcii-po-ekspluatacii-kondicionerov.html

WIRING DIAGRAM

Indoor Unit

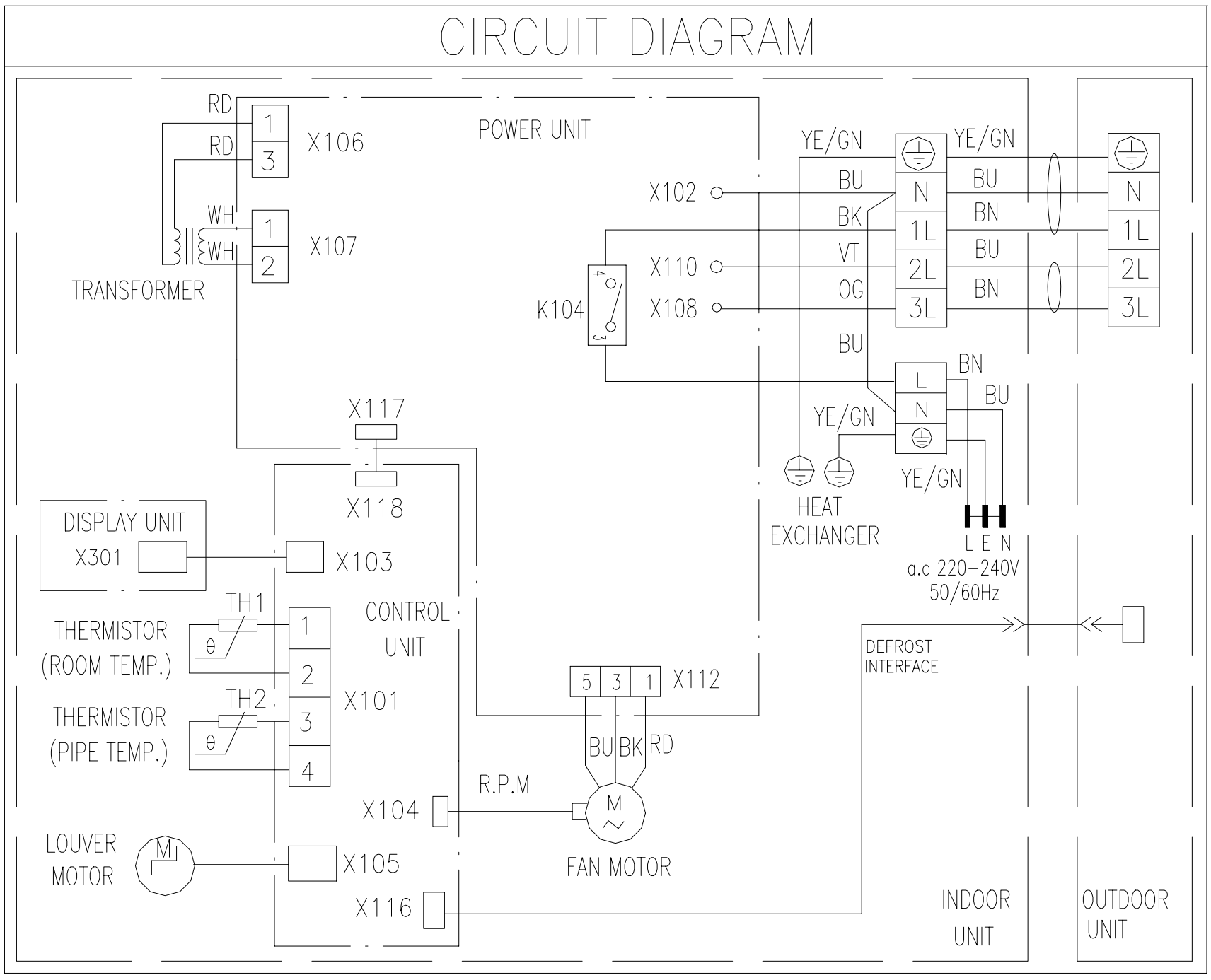

Все каталоги и инструкции здесь: https://splitsystema48.ru/instrukcii-po-ekspluatacii-kondicionerov.html

Outdoor Unit

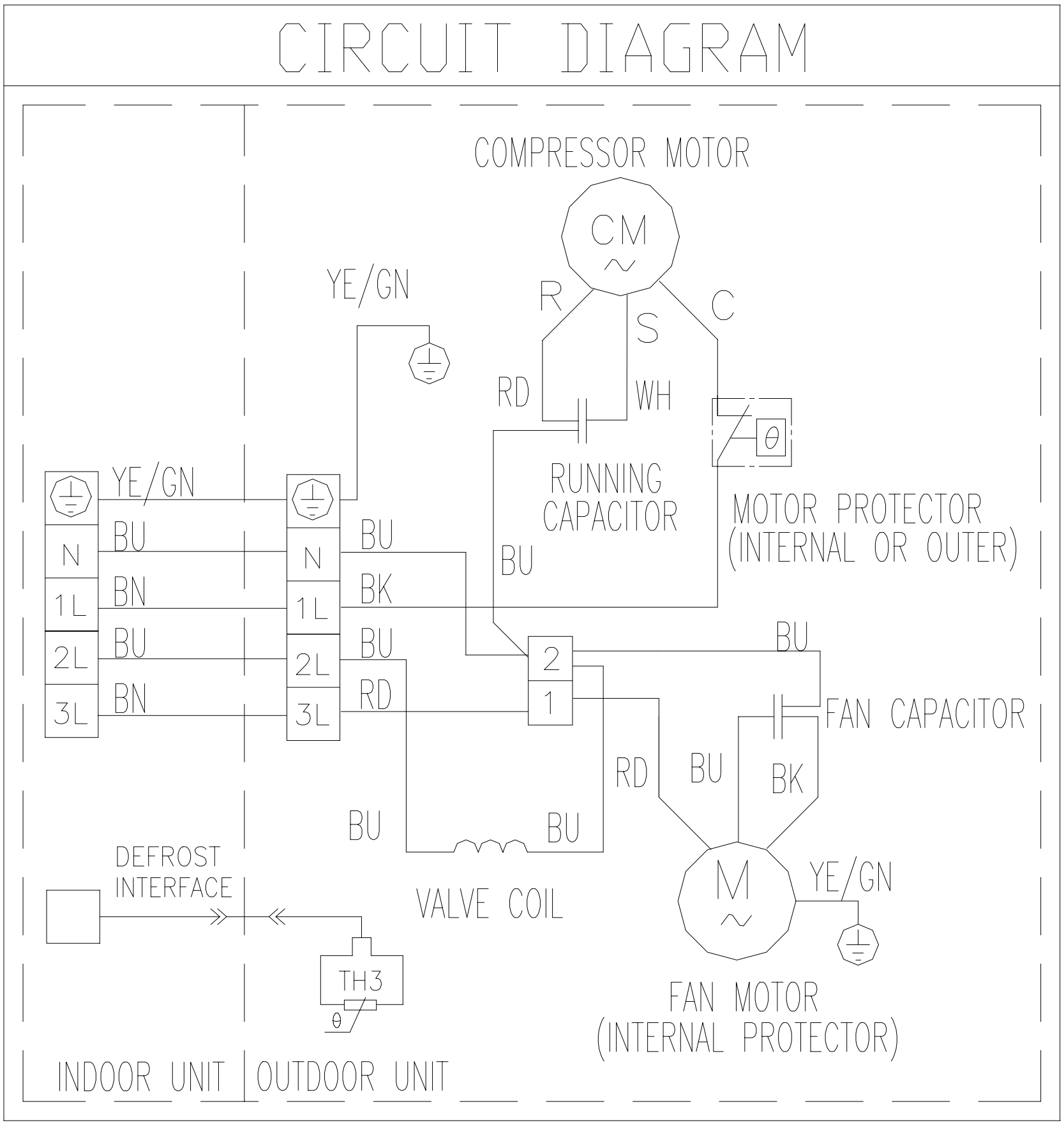

Все каталоги и инструкции здесь: https://splitsystema48.ru/instrukcii-po-ekspluatacii-kondicionerov.html

splitoff.ru

Большая библиотека технической документации

https://splitsystema48.ru/instrukcii-po-ekspluatacii-kondicionerov.html

каталоги, инструкции, сервисные мануалы, схемы.